ZANEEN®

PROJECT	
TYPE	
SPECIFIER	
QUANTITY	
DATE	

BIONIQ ROUND ADJUSTABLE TRIMLESS

A35182- _____ - _____ - _____ - _____

base number	LED Dimming	Color Temperature	Finishes (Diamond)	Ceiling Thickness

1.To build a product code in our configurator select the specify button on the base model # product page
2. To build a manual product code on this datasheet choose from the options listed below in blue font and add the suffix to the base model #

GENERAL

Series: Bioniq
Subseries: Bioniq Round Adjustable
Brand: Prolicht
Division: Architectural
Mounting Type: Trimless
Mounting Location: Ceiling
Subcategory: Downlight

PHYSICAL

Shape: Round
Diameter (mm): 107
Diameter (in): 4 3/16
Height (mm): 112
Height (in): 4 7/16
Ceiling Thickness (mm): 10 / 12.5 / 15 / 25
Ceiling Thickness (in): 3/8 or 1/2 or 9/16 or 1
Min. Recessing Depth (mm): 130
Min. Recessing Depth (in): 5 1/8
Light Distribution: Adjustable / Downlight
Weight (kg): 0.596
Weight (lbs): 1.31
Fixture Finish: SSR / BKV / CWI / CRY / HAB / LAG / UFT / ITA / RUA / RUR / MIC / FTG / MYG / TWT / LOD / PUS / FRO / FUP / KIA / POP / BLS / SPG / MEY / GOH / GUM / CHC / COM / ABZ / JAG / OBR / MOS / ROR
Fixture Material: Aluminum Die Cast
Cut-out Measurements: ⊠ 111mm / 4 3/8"
Upon Request: Unique Ceiling Thickness

ELECTRICAL

Lamp Type: LED (Zhaga Standard)
Input Wattage (W): 13.2 / 16.5
Total Output Wattage (W): 12.1 / 14.7
Dimming: Tri-Mode (Non-Dimming and Phase Dimming (120Vac only) and 0-10V Dimming)
Driver Included: No
Driver Location: Recessed Housing
Driver Type: Constant Current - Universal
Driver Class: Class 2
Housing: See components
Input Voltage (V): 120 - 277
Constant Current (MA): 350

LED

Number of LEDs: 1
Color Temperature (°K): 2700 / 3000 / 3500 / 4000
Max. Delivered Lumen (lm): 850 / 950 / 1019 / 1040
Nominal Lumen (lm): 960 / 1070 / 1156 / 1180
CRI: >90 CRI
Lamp Life (hrs): 50000
Upon Request: RGB-W Tunable White Special Color Temperature Special LED

OPTICAL

Reflector°: 10
Adjustability: Rotational 355°; Tilt 30°
Upon Request: Special Beam Angles

RATINGS AND CERTIFICATIONS

Certified By: Certified for North American Standards
IP rating: IP20

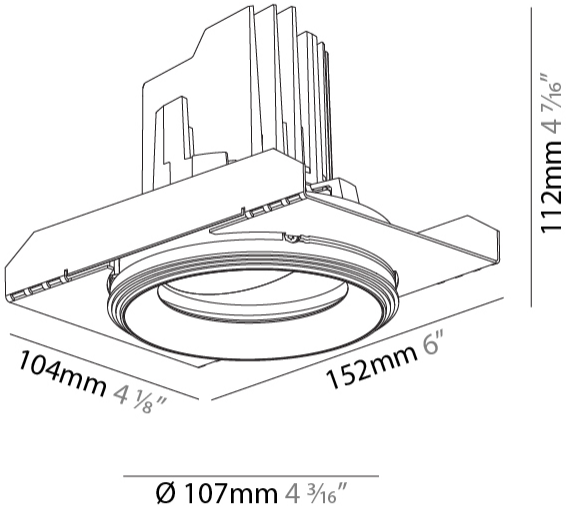

Zaneen Group Inc. © 2024, T 1800-388-3382, F 416-247-9319, www.zaneen.com
Available for international specifications by adding 'INT' at the end of the existing Model #. For assistance on 'custom' specifications, contact zteam@zaneen.com.
In a constant effort to supply the best product, we reserve the right to change specifications or materials without notice. The most recent specification sheets are found at zaneen.com

May 31, 2024, 12:59 am

ZANEEN®

PROJECT	
TYPE	
SPECIFIER	
QUANTITY	
DATE	

BIONIQ ROUND ADJUSTABLE TRIMLESS

A35182-

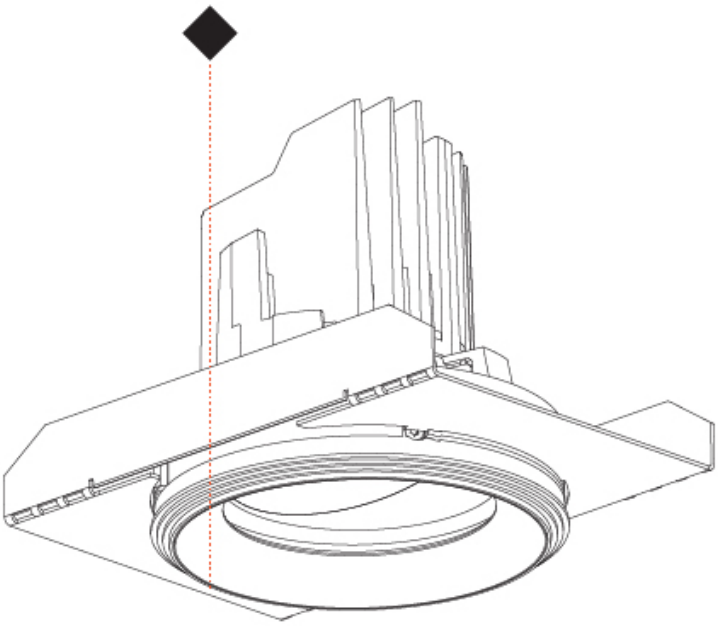

A

Zaneen Group Inc. © 2024, T 1800-388-3382, F 416-247-9319, www.zaneen.com

Available for International specifications by adding 'INT' at the end of the existing Model #. For assistance on 'custom' specifications, contact zteam@zaneen.com.
In a constant effort to supply the best product, we reserve the right to change specifications or materials without notice. The most recent specification sheets are found at zaneen.com

ZANEEN®

PROJECT	
TYPE	
SPECIFIER	
QUANTITY	
DATE	

BIONIQ ROUND ADJUSTABLE TRIMLESS

A35188- _____ - _____ - _____ - _____

base number | LED Dimming | Color Temperature | Finishes (Diamond) | Ceiling Thickness

1.To build a product code in our configurator select the specify button on the base model # product page
2. To build a manual product code on this datasheet choose from the options listed below in blue font and add the suffix to the base model #

GENERAL

Series: Bioniq
Subseries: Bioniq Round Adjustable
Brand: Prolicht
Division: Architectural
Mounting Type: Trimless
Mounting Location: Ceiling
Subcategory: Downlight

PHYSICAL

Shape: Round
Diameter (mm): 136
Diameter (in): 5 3/8
Height (mm): 136
Height (in): 5 3/8
Ceiling Thickness (mm): 10 / 12.5 / 15 / 25
Ceiling Thickness (in): 3/8 or 1/2 or 9/16 or 1
Min. Recessing Depth (mm): 150
Min. Recessing Depth (in): 5 7/8
Light Distribution: Adjustable / Downlight
Weight (kg): 1.02
Weight (lbs): 2.24
Fixture Finish: SSR / BKV / CWI / CRY / HAB / LAG / UFT / ITA / RUA / RUR / MIC / FTG / MYG / TWT / LOD / PUS / FRO / FUP / KIA / POP / BLS / SPG / MEY / GOH / GUM / CHC / COM / ABZ / JAG / OBR / MOS / ROR
Fixture Material: Aluminum Die Cast
Cut-out Measurements: ⊠ 140mm / 5 1/2"
Upon Request: Unique Ceiling Thickness

ELECTRICAL

Lamp Type: LED (Zhaga Standard)
Input Wattage (W): 13.2 / 16.5
Total Output Wattage (W): 12.1 / 14.7
Dimming: Tri-Mode (Non-Dimming and Phase Dimming (120Vac only) and 0-10V Dimming)
Driver Included: No
Driver Location: Recessed Housing
Driver Type: Constant Current - Universal
Driver Class: Class 2
Housing: See components
Input Voltage (V): 120 - 277
Constant Current (MA): 350

LED

Number of LEDs: 1
Color Temperature (°K): 2700 / 3000 / 3500 / 4000
Max. Delivered Lumen (lm): 870 / 970 / 1038 / 1060
Nominal Lumen (lm): 960 / 1070 / 1156 / 1180
CRI: >90 CRI
Efficiency (%): 90.5
Lamp Life (hrs): 50000
Upon Request: RGB-W Tunable White Special Color Temperature Special LED

OPTICAL

Reflector°: 10
Beam Angle: Narrow
Adjustability: Rotational 355°; Tilt 30°
Upon Request: Special Beam Angles

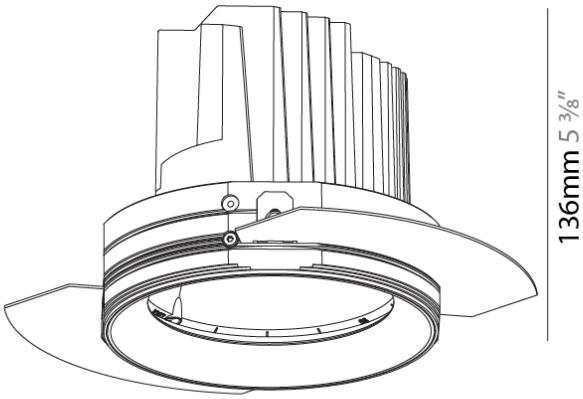

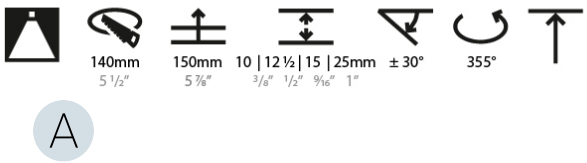

RATINGS AND CERTIFICATIONS

Certified By: Certified for North American Standards
IP rating: IP20

ZANEEN Inc. 416-247-9333 F 416-247-9382, F 416-247-9319, www.zaneen.com
Available for International specifications by adding 'INT' at the end of the existing Model #. For assistance on 'custom' specifications, contact zteam@zaneen.com.
In a constant effort to supply the best product, we reserve the right to change specifications or materials without notice. The most recent specification sheets are found at zaneen.com

ZANEEN®

PROJECT	
TYPE	
SPECIFIER	
QUANTITY	
DATE	

BIONIQ ROUND ADJUSTABLE TRIMLESS

A35188-

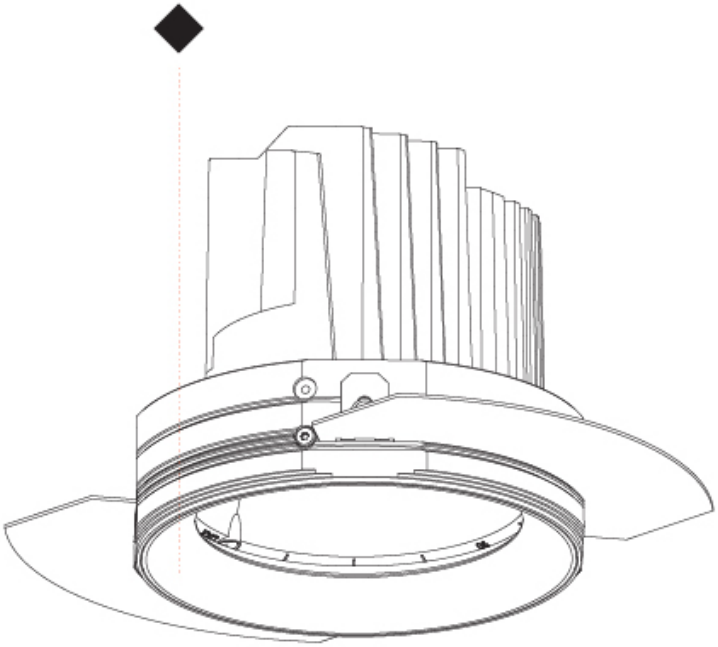

A

Zaneen Group Inc. © 2024, T 1800-388-3382, F 416-247-9319, www.zaneen.com

Available for International specifications by adding 'INT' at the end of the existing Model #. For assistance on 'custom' specifications, contact zteam@zaneen.com.
In a constant effort to supply the best product, we reserve the right to change specifications or materials without notice. The most recent specification sheets are found at zaneen.com

ZANEEN®

PROJECT	
TYPE	
SPECIFIER	
QUANTITY	
DATE	

BIONIQ ROUND DEEP TRIMLESS

A35191- _____ - _____ - _____ - _____ - _____

base number	Color Temperature	Finishes (Diamond)	Ceiling Thickness	Reflector Options	Lens Options

1.To build a product code in our configurator select the specify button on the base model # product page
2. To build a manual product code on this datasheet choose from the options listed below in blue font and add the suffix to the base model #

GENERAL

Series: Bioniq
Subseries: Bioniq Round Deep
Brand: Prolicht
Division: Architectural
Mounting Type: Trimless
Mounting Location: Ceiling
Subcategory: Downlight

PHYSICAL

Shape: Round
Diameter (mm): 107
Diameter (in): 4 3/16
Height (mm): 130
Height (in): 5 1/8
Ceiling Thickness (mm): 10 / 12.5 / 15 / 25
Ceiling Thickness (in): 3/8 or 1/2 or 9/16 or 1
Min. Recessing Depth (mm): 150
Min. Recessing Depth (in): 5 7/8
Light Distribution: Downlight
Weight (kg): 0.646
Weight (lbs): 1.42
Fixture Finish: SSR / BKV / CWI / CRY / HAB / LAG / UFT / ITA / RUA / RUR / MIC / FTG / MYG / TWT / LOD / PUS / FRO / FUP / KIA / POP / BLS / SPG / MEY / GOH / GUM / CHC / COM / ABZ / JAG / OBR / MOS / ROR
Fixture Material: Aluminum Die Cast
Cut-out Measurements: ⌀ 111mm / 4 3/8"
Upon Request: Unique Ceiling Thickness

ELECTRICAL

Lamp Type: LED (Zhaga Standard)
Input Wattage (W): 13
Total Output Wattage (W): 11.8
Dimming: Tri-Mode (Non-Dimming and Phase Dimming (120Vac only) and 0-10V Dimming)
Driver Included: No
Driver Location: Recessed Housing
Driver Type: Constant Current - Universal
Driver Class: Class 2
Housing: See components
Input Voltage (V): 120 - 277
Constant Current (MA): 350

LED

Number of LEDs: 1
Color Temperature (°K): 2700 / 3000 / 3500 / 4000
Max. Delivered Lumen (lm): 876 / 909 / 955 / 974
Nominal Lumen (lm): 1304 / 1352 / 1421 / 1450
CRI: >90 CRI
Efficiency (%): 87.9 / 88.4 / 87.9
Lamp Life (hrs): 50000
Upon Request: RGB-W Tunable White Special Color Temperature Special LED

OPTICAL

Reflector°: 18 / 42 / 60
Optic°: Lens Pack - No Lens / Linear Spread Lens / Honeycomb / Spread Lens
Upon Request: Special Beam Angles

RATINGS AND CERTIFICATIONS

Certified By: Certified for North American Standards
IP rating: IP20

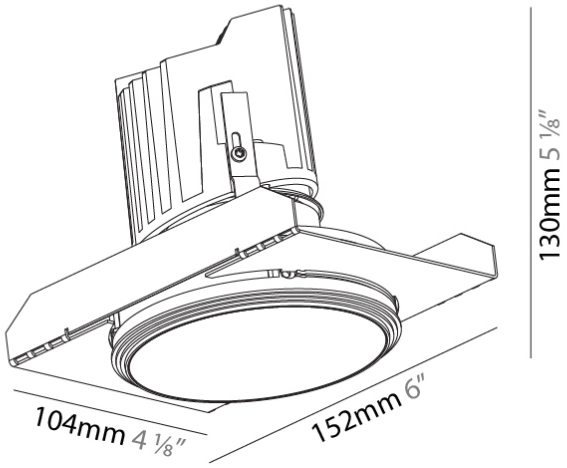

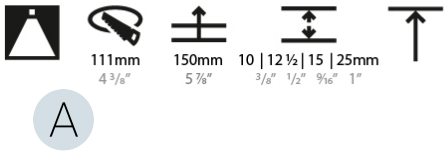

ZANEEN Lighting Inc. 1-866-926-3382, F 416-247-9319, www.zaneen.com

Available for International specifications by adding 'INT' at the end of the existing Model #. For assistance on 'custom' specifications, contact zteam@zaneen.com.
In a constant effort to supply the best product, we reserve the right to change specifications or materials without notice. The most recent specification sheets are found at zaneen.com

ZANEEN®

BIONIQ ROUND DEEP TRIMLESS

PROJECT	
TYPE	
SPECIFIER	
QUANTITY	
DATE	

A35191-

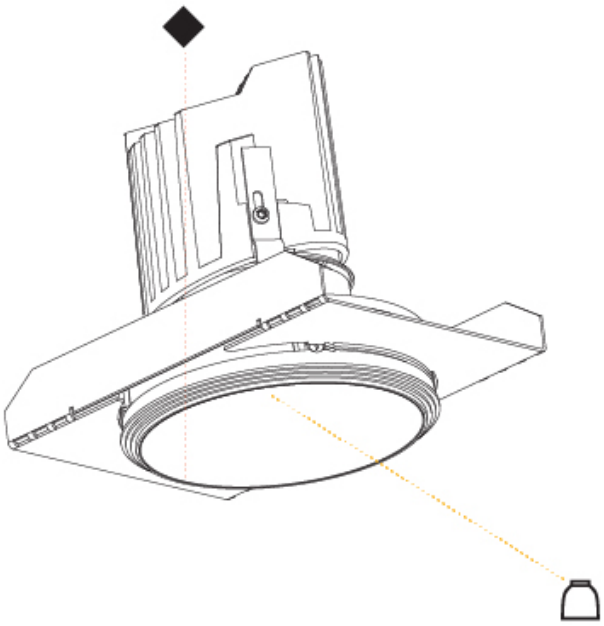

A

Zaneen Group Inc. © 2024, T 1800-388-3382, F 416-247-9319, www.zaneen.com

Available for International specifications by adding 'INT' at the end of the existing Model #. For assistance on 'custom' specifications, contact zteam@zaneen.com.
In a constant effort to supply the best product, we reserve the right to change specifications or materials without notice. The most recent specification sheets are found at zaneen.com

ZANEEN®

PROJECT	
TYPE	
SPECIFIER	
QUANTITY	
DATE	

BIONIQ ROUND DEEP TRIMLESS

A35197- _____ - _____ - _____ - _____

base number | Color Temperature | Finishes (Diamond) | Ceiling Thickness | Lens Options

1.To build a product code in our configurator select the specify button on the base model # product page
2. To build a manual product code on this datasheet choose from the options listed below in blue font and add the suffix to the base model #

GENERAL

Series: Bioniq
Subseries: Bioniq Round Deep
Brand: Prolicht
Division: Architectural
Mounting Type: Trimless
Mounting Location: Ceiling
Subcategory: Downlight

PHYSICAL

Shape: Round
Diameter (mm): 136
Diameter (in): 5 3/8
Height (mm): 151
Height (in): 5 15/16
Ceiling Thickness (mm): 10 / 12.5 / 15 / 25
Ceiling Thickness (in): 3/8 or 1/2 or 9/16 or 1
Min. Recessing Depth (mm): 170
Min. Recessing Depth (in): 6 11/16
Light Distribution: Downlight
Weight (kg): 1.073
Weight (lbs): 2.36
Fixture Finish: SSR / BKV / CWI / CRY / HAB / LAG / UFT / ITA / RUA / RUR / MIC / FTG / MYG / TWT / LOD / PUS / FRO / FUP / KIA / POP / BLS / SPG / MEY / GOH / GUM / CHC / COM / ABZ / JAG / OBR / MOS / ROR
Fixture Material: Aluminum Die Cast
Cut-out Measurements: ⊠ 140mm / 5 1/2"
Upon Request: Unique Ceiling Thickness

ELECTRICAL

Lamp Type: LED (Zhaga Standard)
Input Wattage (W): 13.2 / 16.5
Total Output Wattage (W): 12.1 / 14.7
Dimming: Tri-Mode (Non-Dimming and Phase Dimming (120Vac only) and 0-10V Dimming)
Driver Included: No
Driver Location: Recessed Housing
Driver Type: Constant Current - Universal
Driver Class: Class 2
Housing: See components
Input Voltage (V): 120 - 277
Constant Current (MA): 350

LED

Number of LEDs: 1
Color Temperature (°K): 2700 / 3000 / 3500 / 4000
Max. Delivered Lumen (lm): 814 / 877 / 911 / 930
Nominal Lumen (lm): 1246 / 1342 / 1396 / 1424
CRI: >90 CRI
Efficiency (%): 90.5
Lamp Life (hrs): 50000
Upon Request: RGB-W Tunable White Special Color Temperature Special LED

OPTICAL

Reflector°: 10
Optic°: Lens Pack - No Lens / Linear Spread Lens / Honeycomb / Spread Lens
Upon Request: Special Beam Angles

RATINGS AND CERTIFICATIONS

Certified By: Certified for North American Standards
IP rating: IP20

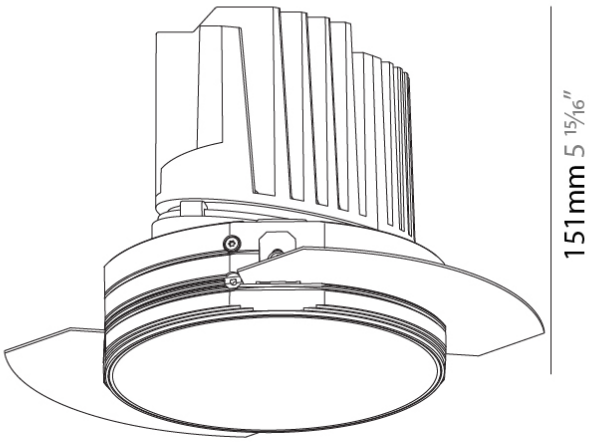

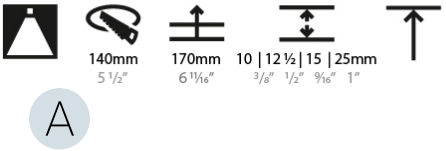

ZANEEN Lighting Inc. 1-866-926-3382, F 416-247-9319, www.zaneen.com

Available for International specifications by adding 'INT' at the end of the existing Model #. For assistance on 'custom' specifications, contact zteam@zaneen.com.
In a constant effort to supply the best product, we reserve the right to change specifications or materials without notice. The most recent specification sheets are found at zaneen.com

ZANEEN®

BIONIQ ROUND DEEP TRIMLESS

PROJECT	
TYPE	
SPECIFIER	
QUANTITY	
DATE	

A35197-

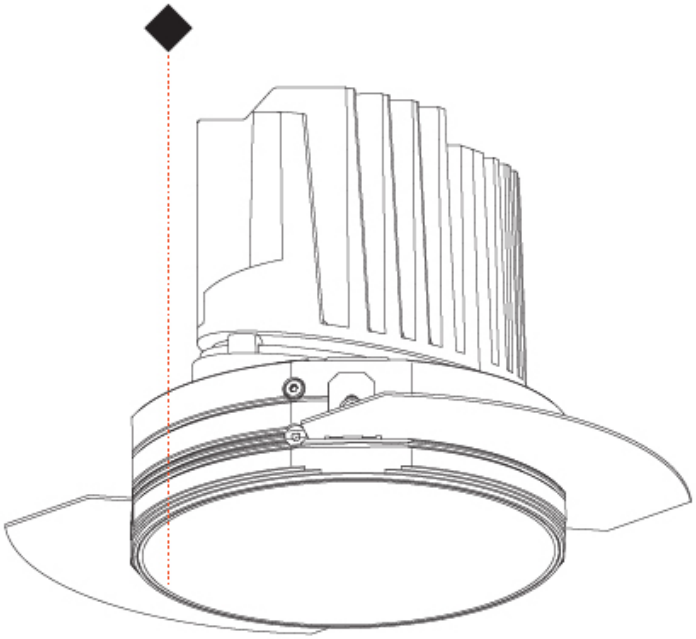

A

Zaneen Group Inc. © 2024, T 1800-388-3382, F 416-247-9319, www.zaneen.com

Available for International specifications by adding 'INT' at the end of the existing Model #. For assistance on 'custom' specifications, contact zteam@zaneen.com.
In a constant effort to supply the best product, we reserve the right to change specifications or materials without notice. The most recent specification sheets are found at zaneen.com

ZANEEN®

PROJECT	
TYPE	
SPECIFIER	
QUANTITY	
DATE	

BIONIQ ROUND SEMI ADJUSTABLE TRIMLESS

A35203- _____ - _____ - _____

base number | Color Temperature | Finishes (Diamond) | Ceiling Thickness

1.To build a product code in our configurator select the specify button on the base model # product page
2. To build a manual product code on this datasheet choose from the options listed below in blue font and add the suffix to the base model #

GENERAL

Series: Bioniq
Subseries: Bioniq Round Semi Adjustable
Brand: Prolicht
Division: Architectural
Mounting Type: Trimless
Mounting Location: Ceiling
Subcategory: Downlight

PHYSICAL

Shape: Round
Diameter (mm): 107
Diameter (in): 4 3/16
Height (mm): 112
Height (in): 4 7/16
Ceiling Thickness (mm): 10 / 12.5 / 15 / 25
Ceiling Thickness (in): 3/8 or 1/2 or 9/16 or 1
Min. Recessing Depth (mm): 130
Min. Recessing Depth (in): 5 1/8
Light Distribution: Adjustable / Downlight
Weight (kg): 0.624
Weight (lbs): 1.38
Fixture Finish: SSR / BKV / CWI / CRY / HAB / LAG / UFT / ITA / RUA / RUR / MIC / FTG / MYG / TWT / LOD / PUS / FRO / FUP / KIA / POP / BLS / SPG / MEY / GOH / GUM / CHC / COM / ABZ / JAG / OBR / MOS / ROR
Fixture Material: Aluminum Die Cast
Cut-out Measurements: ⊠ 111mm / 4 3/8"
Upon Request: Unique Ceiling Thickness

ELECTRICAL

Lamp Type: LED (Zhaga Standard)
Input Wattage (W): 13.2 / 16.5
Total Output Wattage (W): 12.1 / 14.7
Dimming: Tri-Mode (Non-Dimming and Phase Dimming (120Vac only) and 0-10V Dimming)
Driver Included: No
Driver Location: Recessed Housing
Driver Type: Constant Current - Universal
Driver Class: Class 2
Housing: See components
Input Voltage (V): 120 - 277
Constant Current (MA): 350

LED

Number of LEDs: 1
Color Temperature (°K): 2700 / 3000 / 3500 / 4000
Max. Delivered Lumen (lm): 850 / 950 / 1019 / 1040
Nominal Lumen (lm): 960 / 1070 / 1156 / 1180
CRI: >90 CRI
Efficiency (%): 88.5
Lamp Life (hrs): 50000
Upon Request: RGB-W Tunable White Special Color Temperature Special LED

OPTICAL

Reflector°: 10
Adjustability: Rotational 355°; Tilt 10°
Upon Request: Special Beam Angles

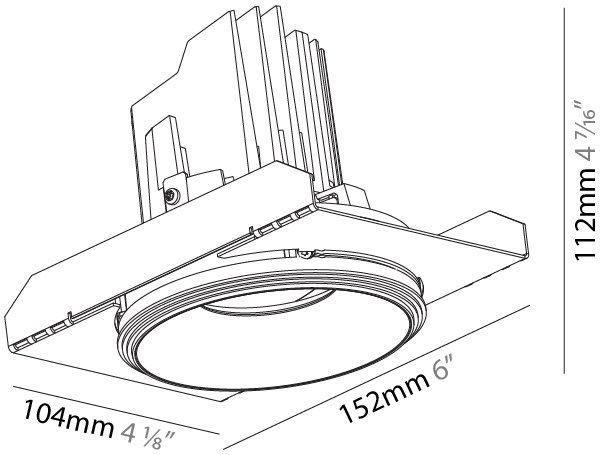

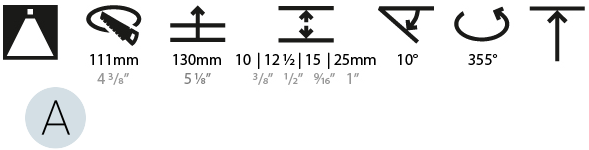

RATINGS AND CERTIFICATIONS

Certified By: Certified for North American Standards
IP Rating: IP20

Zaneen Group Inc. © 2024, T 1800-388-3382, F 416-247-9319, www.zaneen.com
Available for International specifications by adding 'INT' at the end of the existing Model #. For assistance on 'custom' specifications, contact zteam@zaneen.com.
In a consistent effort to supply the best product, we reserve the right to change specifications or materials without notice. The most recent specification sheets are found at zaneen.com

ZANEEN®

PROJECT	
TYPE	
SPECIFIER	
QUANTITY	
DATE	

BIONIQ ROUND SEMI ADJUSTABLE TRIMLESS

A35203-

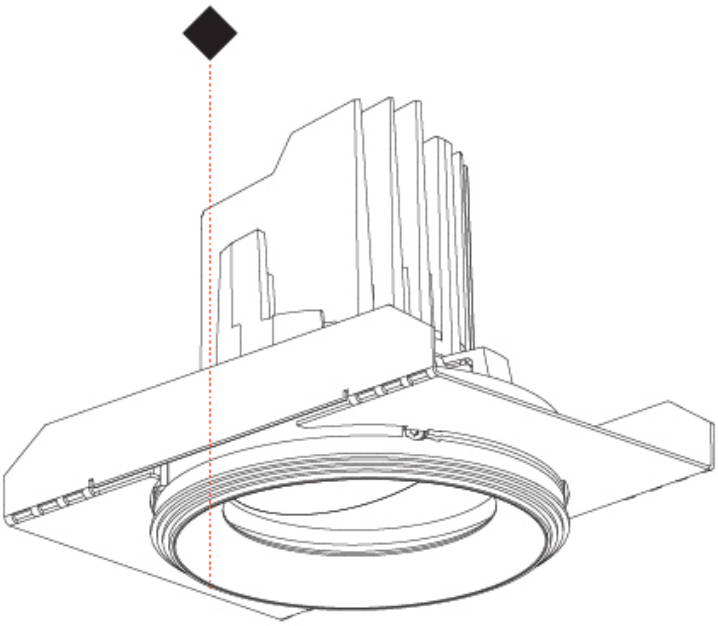

A

Zaneen Group Inc. © 2024, T 1800-388-3382, F 416-247-9319, www.zaneen.com

Available for International specifications by adding 'INT' at the end of the existing Model #. For assistance on 'custom' specifications, contact zteam@zaneen.com.
In a constant effort to supply the best product, we reserve the right to change specifications or materials without notice. The most recent specification sheets are found at zaneen.com

ZANEEN®

PROJECT	
TYPE	
SPECIFIER	
QUANTITY	
DATE	

BIONIQ ROUND SEMI ADJUSTABLE TRIMLESS

A35209- _____ - _____ - _____ - _____

base number | LED Dimming | Color Temperature | Finishes (Diamond) | Ceiling Thickness

1.To build a product code in our configurator select the specify button on the base model # product page
2. To build a manual product code on this datasheet choose from the options listed below in blue font and add the suffix to the base model #

GENERAL

Series: Bioniq
Subseries: Bioniq Round Semi Adjustable
Brand: Prolicht
Division: Architectural
Mounting Type: Trimless
Mounting Location: Ceiling
Subcategory: Downlight

PHYSICAL

Shape: Round
Diameter (mm): 136
Diameter (in): 5 3/8
Height (mm): 136
Height (in): 5 3/8
Ceiling Thickness (mm): 10 / 12.5 / 15 / 25
Ceiling Thickness (in): 3/8 or 1/2 or 9/16 or 1
Min. Recessing Depth (mm): 150
Min. Recessing Depth (in): 5 7/8
Light Distribution: Adjustable / Downlight
Weight (kg): 1.04
Weight (lbs): 2.29
Fixture Finish: SSR / BKV / CWI / CRY / HAB / LAG / UFT / ITA / RUA / RUR / MIC / FTG / MYG / TWT / LOD / PUS / FRO / FUP / KIA / POP / BLS / SPG / MEY / GOH / GUM / CHC / COM / ABZ / JAG / OBR / MOS / ROR
Fixture Material: Aluminum Die Cast
Cut-out Measurements: ⊠ 140mm / 5 1/2"
Upon Request: Unique Ceiling Thickness

ELECTRICAL

Lamp Type: LED (Zhaga Standard)
Input Wattage (W): 13.2 / 16.5
Total Output Wattage (W): 12.1 / 14.7
Dimming: Tri-Mode (Non-Dimming and Phase Dimming (120Vac only) and 0-10V Dimming)
Driver Included: No
Driver Location: Recessed Housing
Driver Type: Constant Current - Universal
Driver Class: Class 2
Housing: See components
Input Voltage (V): 120 - 277
Constant Current (MA): 350

LED

Number of LEDs: 1
Color Temperature (°K): 2700 / 3000 / 3500 / 4000
Max. Delivered Lumen (lm): 870 / 970 / 1038 / 1060
Nominal Lumen (lm): 960 / 1070 / 1156 / 1180
CRI: >90 CRI
Efficiency (%): 90.5
Lamp Life (hrs): 50000
Upon Request: RGB-W Tunable White Special Color Temperature Special LED

OPTICAL

Reflector°: 10
Adjustability: Rotational 355°; Tilt 10°
Upon Request: Special Beam Angles

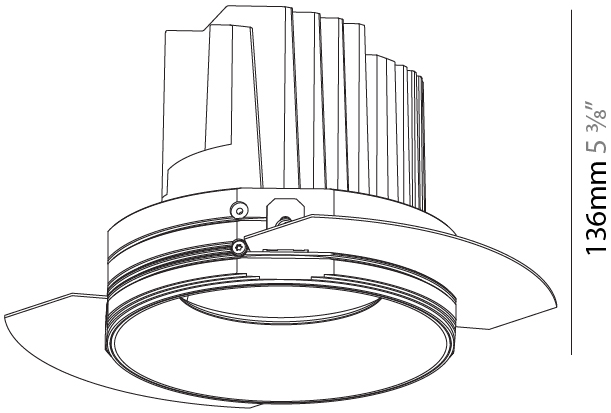

Ø 136mm 5 3/8"

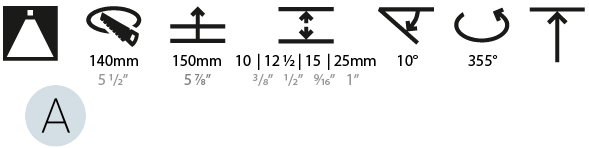

RATINGS AND CERTIFICATIONS

Certified By: Certified for North American Standards
IP rating: IP20

Zaneen Group Inc. © 2024, T 1800-388-3382, F 416-247-9319, www.zaneen.com
Available for International specifications by adding 'INT' at the end of the existing Model #. For assistance on 'custom' specifications, contact zteam@zaneen.com.
In a constant effort to supply the best product, we reserve the right to change specifications or materials without notice. The most recent specification sheets are found at zaneen.com

ZANEEN®

PROJECT	
TYPE	
SPECIFIER	
QUANTITY	
DATE	

BIONIQ ROUND SEMI ADJUSTABLE TRIMLESS

A35209-

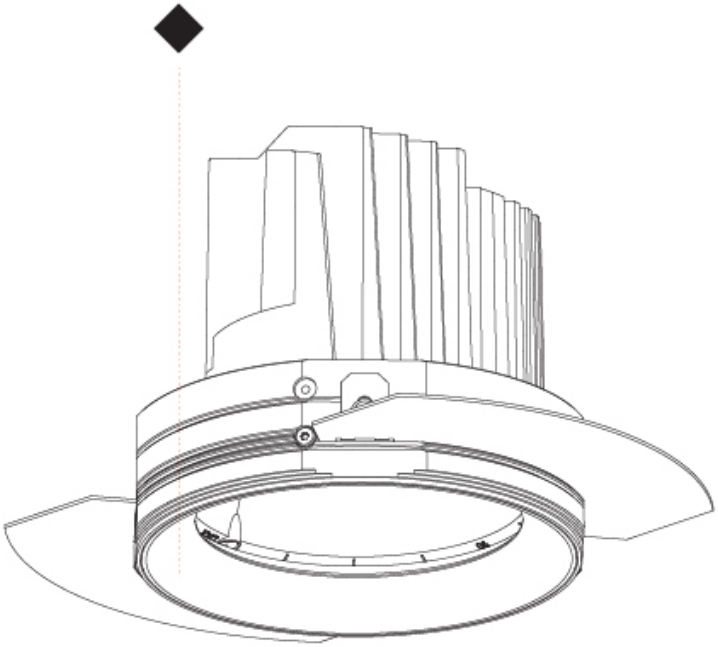

A

Zaneen Group Inc. © 2024, T 1800-388-3382, F 416-247-9319, www.zaneen.com

Available for International specifications by adding 'INT' at the end of the existing Model #. For assistance on 'custom' specifications, contact zteam@zaneen.com.
In a constant effort to supply the best product, we reserve the right to change specifications or materials without notice. The most recent specification sheets are found at zaneen.com

ZANEEN®

PROJECT	
TYPE	
SPECIFIER	
QUANTITY	
DATE	

BIONIQ ROUND ADJUSTABLE RECESSED

A35224- _____ - _____

base number | Color Temperature | Finishes (Diamond)

1.To build a product code in our configurator select the specify button on the base model # product page
2. To build a manual product code on this datasheet choose from the options listed below in blue font and add the suffix to the base model #

GENERAL

Series: Bioniq
Subseries: Bioniq Round Adjustable
Brand: Prolicht
Division: Architectural
Mounting Type: Recessed
Mounting Location: Ceiling
Subcategory: Downlight

PHYSICAL

Shape: Round
Diameter (mm): 107
Diameter (in): 4 3/16
Height (mm): 112
Height (in): 4 7/16
Ceiling Thickness (mm): 10 / 12.5 / 15
Ceiling Thickness (in): 3/8 or 1/2 or 9/16
Min. Recessing Depth (mm): 130
Min. Recessing Depth (in): 5 1/8
Light Distribution: Adjustable / Downlight
Weight (kg): 0.47
Weight (lbs): 1.04
Fixture Finish: SSR / BKV / CWI / CRY / HAB / LAG / UFT / ITA / RUA / RUR / MIC / FTG / MYG / TWT / LOD / PUS / FRO / FUP / KIA / POP / BLS / SPG / MEY / GOH / GUM / CHC / COM / ABZ / JAG / OBR / MOS / ROR
Fixture Material: Aluminum Die Cast
Cut-out Measurements: 98mm / 3 7/8"

ELECTRICAL

Lamp Type: LED (Zhaga Standard)
Input Wattage (W): 13.2 / 16.5
Total Output Wattage (W): 12 / 15
Dimming: Tri-Mode (Non-Dimming and Phase Dimming (120Vac only) and 0-10V Dimming)
Driver Included: No
Driver Location: Recessed Housing
Driver Type: Constant Current - Universal
Driver Class: Class 2
Housing: See components
Input Voltage (V): 120 - 277
Constant Current (MA): 350

LED

Number of LEDs: 1
Color Temperature (°K): 2700 / 3000 / 3500 / 4000
Max. Delivered Lumen (lm): 850 / 950 / 1019 / 1040
Nominal Lumen (lm): 960 / 1070 / 1156 / 1180
CRI: >90 CRI
Efficiency (%): 0.885
Lamp Life (hrs): 50000

OPTICAL

Reflector°: 10
Adjustability: Rotational 355°; Tilt 30°

RATINGS AND CERTIFICATIONS

Certified By: Certified for North American Standards
IP rating: IP20

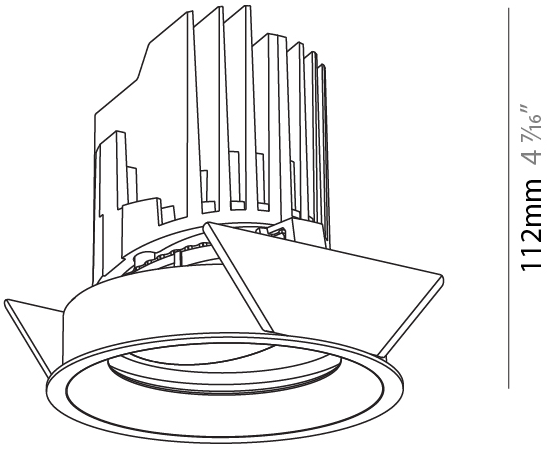

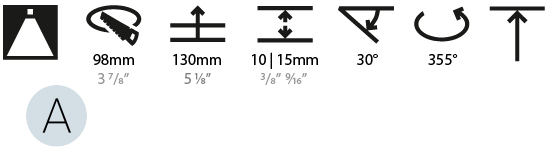

Zaneen Group Inc. © 2024, T 1800-388-3382, F 416-247-9319, www.zaneen.com
Available for International specifications by adding 'INT' at the end of the existing Model #. For assistance on 'custom' specifications, contact zteam@zaneen.com.
In a constant effort to supply the best product, we reserve the right to change specifications or materials without notice. The most recent specification sheets are found at zaneen.com

ZANEEN®

PROJECT	
TYPE	
SPECIFIER	
QUANTITY	
DATE	

BIONIQ ROUND ADJUSTABLE RECESSED

A35224-

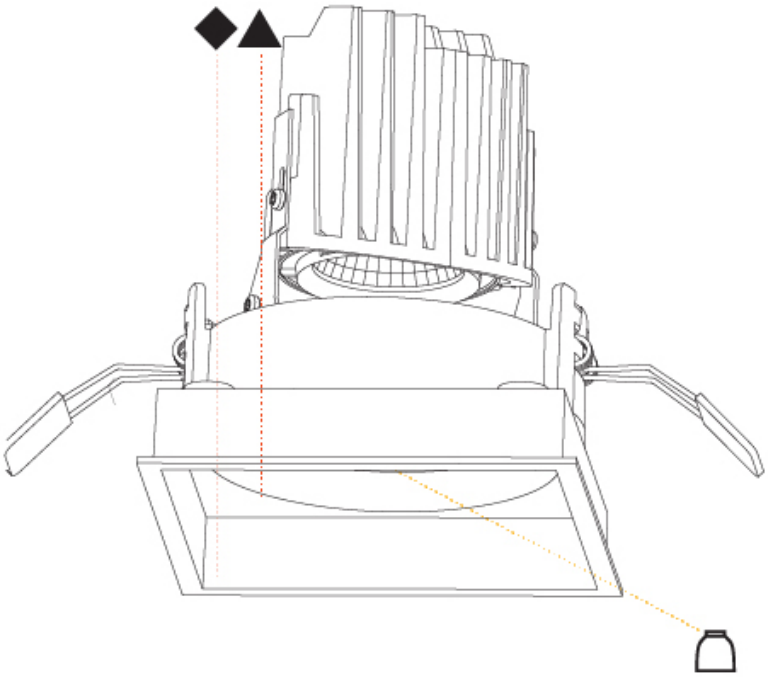

A

Zaneen Group Inc. © 2024, T 1800-388-3382, F 416-247-9319, www.zaneen.com

Available for International specifications by adding 'INT' at the end of the existing Model #. For assistance on 'custom' specifications, contact zteam@zaneen.com.
In a constant effort to supply the best product, we reserve the right to change specifications or materials without notice. The most recent specification sheets are found at zaneen.com

ZANEEN®

PROJECT	
TYPE	
SPECIFIER	
QUANTITY	
DATE	

BIONIQ ROUND ADJUSTABLE RECESSED

A35233- _____ - _____

base number | Color Temperature | Finishes (Diamond)

1.To build a product code in our configurator select the specify button on the base model # product page
2. To build a manual product code on this datasheet choose from the options listed below in blue font and add the suffix to the base model #

GENERAL

Series: Bioniq
Subseries: Bioniq Round Adjustable
Brand: Prolicht
Division: Architectural
Mounting Type: Recessed
Mounting Location: Ceiling
Subcategory: Downlight

PHYSICAL

Shape: Round
Diameter (mm): 139
Diameter (in): 5 1/2
Height (mm): 137
Height (in): 5 3/8
Ceiling Thickness (mm): 10 / 12.5 / 15
Ceiling Thickness (in): 3/8 or 1/2 or 9/16
Min. Recessing Depth (mm): 150
Min. Recessing Depth (in): 5 7/8
Light Distribution: Adjustable / Downlight
Weight (kg): 0.805
Weight (lbs): 1.77
Fixture Finish: SSR / BKV / CWI / CRY / HAB / LAG / UFT / ITA / RUA / RUR / MIC / FTG / MYG / TWT / LOD / PUS / FRO / FUP / KIA / POP / BLS / SPG / MEY / GOH / GUM / CHC / COM / ABZ / JAG / OBR / MOS / ROR
Fixture Material: Aluminum Die Cast
Cut-out Measurements: 130mm / 5 1/8"

ELECTRICAL

Lamp Type: LED (Zhaga Standard)
Input Wattage (W): 13.2 / 16.5
Total Output Wattage (W): 12 / 14
Dimming: Tri-Mode (Non-Dimming and Phase Dimming (120Vac only) and 0-10V Dimming)
Driver Included: No
Driver Location: Recessed Housing
Driver Type: Constant Current - Universal
Driver Class: Class 2
Housing: See components
Input Voltage (V): 120 - 277
Constant Current (MA): 350

LED

Number of LEDs: 1
Color Temperature (°K): 2700 / 3000 / 3500 / 4000
Max. Delivered Lumen (lm): 870 / 970 / 1039 / 1060
Nominal Lumen (lm): 960 / 1070 / 1156 / 1180
CRI: >90 CRI
Efficiency (%): 0.905
Lamp Life (hrs): 50000

OPTICAL

Reflector°: 10
Optic°: Lens Pack - No Lens
Adjustability: Rotational 355°; Tilt 30°

RATINGS AND CERTIFICATIONS

Certified By: CSA Certified to UL and CSA Standards
IP rating: IP20

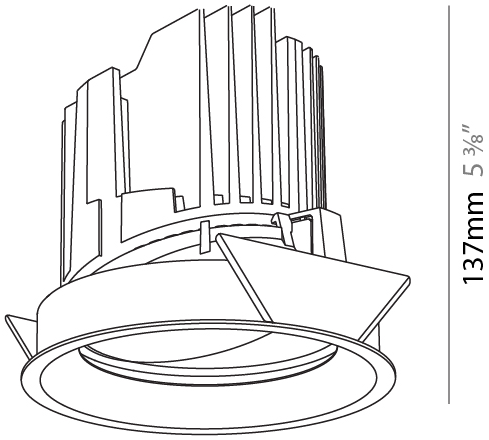

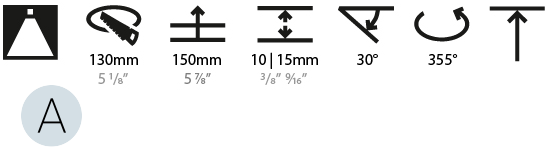

Zaneen Group Inc. © 2024, T 1800-388-3382, F 416-247-9319, www.zaneen.com
Available for International specifications by adding 'INT' at the end of the existing Model #. For assistance on 'custom' specifications, contact zteam@zaneen.com.
In a constant effort to supply the best product, we reserve the right to change specifications or materials without notice. The most recent specification sheets are found at zaneen.com

May 31, 2024, 12:59 am

ZANEEN®

PROJECT	
TYPE	
SPECIFIER	
QUANTITY	
DATE	

BIONIQ ROUND ADJUSTABLE RECESSED

A35233-

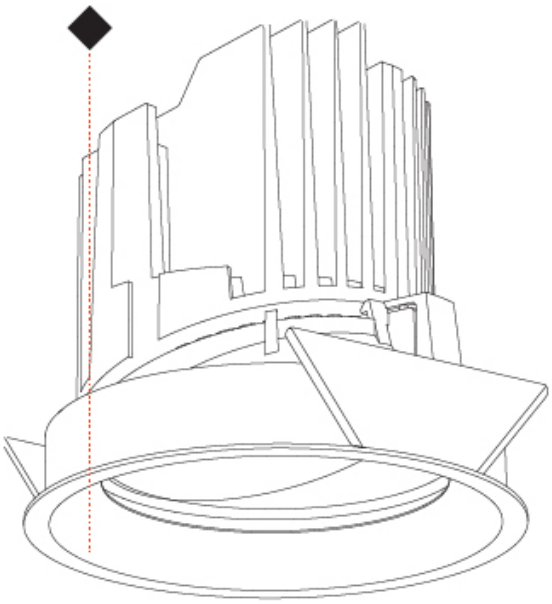

A

Zaneen Group Inc. © 2024, T 1800-388-3382, F 416-247-9319, www.zaneen.com

Available for International specifications by adding 'INT' at the end of the existing Model #. For assistance on 'custom' specifications, contact zteam@zaneen.com.
In a constant effort to supply the best product, we reserve the right to change specifications or materials without notice. The most recent specification sheets are found at zaneen.com

ZANEEN®

PROJECT	
TYPE	
SPECIFIER	
QUANTITY	
DATE	

BIONIQ ROUND ADJUSTABLE RECESSED

A35236- _____ - _____

base number | Color Temperature | Finishes (Diamond)

1.To build a product code in our configurator select the specify button on the base model # product page
2. To build a manual product code on this datasheet choose from the options listed below in blue font and add the suffix to the base model #

GENERAL

Series: Bioniq
Subseries: Bioniq Round Adjustable
Brand: Prolicht
Division: Architectural
Mounting Type: Recessed
Mounting Location: Ceiling
Subcategory: Downlight

PHYSICAL

Shape: Round
Diameter (mm): 107
Diameter (in): 4 3/16
Height (mm): 112
Height (in): 4 7/16
Ceiling Thickness (mm): 10 / 12.5 / 15
Ceiling Thickness (in): 3/8 or 1/2 or 9/16
Min. Recessing Depth (mm): 130
Min. Recessing Depth (in): 5 1/8
Light Distribution: Adjustable / Downlight
Weight (kg): 0.47
Weight (lbs): 1.04
Fixture Finish: SSR / BKV / CWI / CRY / HAB / LAG / UFT / ITA / RUA / RUR / MIC / FTG / MYG / TWT / LOD / PUS / FRO / FUP / KIA / POP / BLS / SPG / MEY / GOH / GUM / CHC / COM / ABZ / JAG / OBR / MOS / ROR
Fixture Material: Aluminum Die Cast
Cut-out Measurements: 98mm / 3 7/8"

ELECTRICAL

Lamp Type: LED (Zhaga Standard)
Input Wattage (W): 13.2 / 16.5
Total Output Wattage (W): 12 / 15
Dimming: Tri-Mode (Non-Dimming and Phase Dimming (120Vac only) and 0-10V Dimming)
Driver Included: No
Driver Location: Recessed Housing
Driver Type: Constant Current - Universal
Driver Class: Class 2
Housing: See components
Input Voltage (V): 120 - 277
Constant Current (MA): 350

LED

Number of LEDs: 1
Color Temperature (°K): 2700 / 3000 / 3500 / 4000
Max. Delivered Lumen (lm): 790 / 880 / 951 / 970
Nominal Lumen (lm): 960 / 1070 / 1156 / 1180
CRI: >90 CRI
Efficiency (%): 0.885
Lamp Life (hrs): 50000

OPTICAL

Reflector°: 10
Optic°: Lens Pack - No Lens
Adjustability: Rotational 355°; Tilt 30°

RATINGS AND CERTIFICATIONS

Certified By: Certified for North American Standards
IP rating: IP20

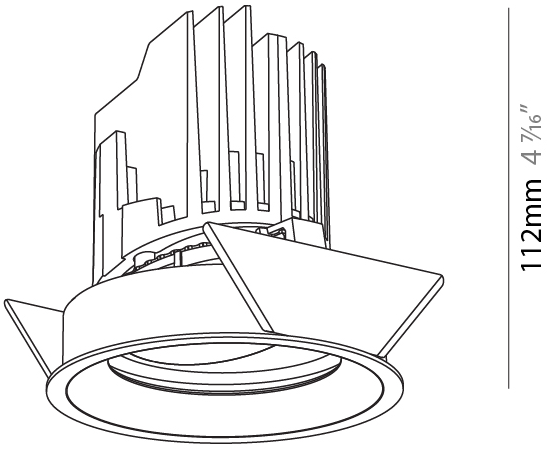

A

Zaneen Group Inc. © 2024, T 1800-388-3382, F 416-247-9319, www.zaneen.com
Available for International specifications by adding 'INT' at the end of the existing Model #. For assistance on 'custom' specifications, contact zteam@zaneen.com.
In a constant effort to supply the best product, we reserve the right to change specifications or materials without notice. The most recent specification sheets are found at zaneen.com

May 31, 2024, 12:59 am

ZANEEN®

PROJECT	
TYPE	
SPECIFIER	
QUANTITY	
DATE	

BIONIQ ROUND ADJUSTABLE RECESSED

A35236-

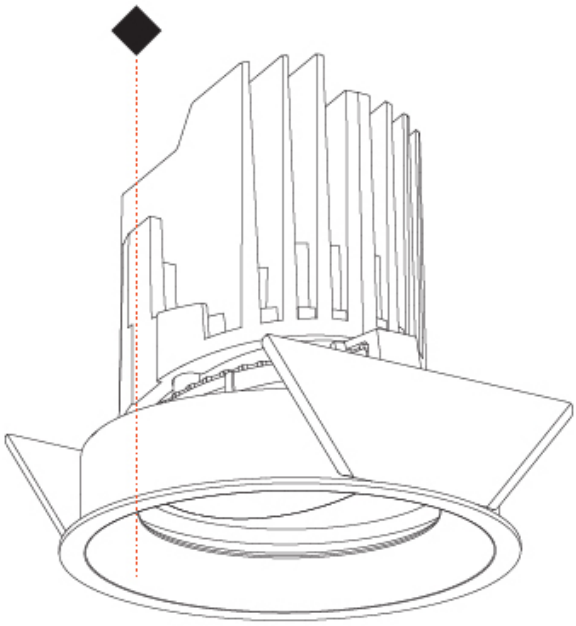

A

Zaneen Group Inc. © 2024, T 1800-388-3382, F 416-247-9319, www.zaneen.com

Available for International specifications by adding 'INT' at the end of the existing Model #. For assistance on 'custom' specifications, contact zteam@zaneen.com.
In a constant effort to supply the best product, we reserve the right to change specifications or materials without notice. The most recent specification sheets are found at zaneen.com

ZANEEN®

PROJECT	
TYPE	
SPECIFIER	
QUANTITY	
DATE	

BIONIQ ROUND ADJUSTABLE RECESSED

A35245- _____ - _____

base number | Color Temperature | Finishes (Diamond)

1.To build a product code in our configurator select the specify button on the base model # product page
2. To build a manual product code on this datasheet choose from the options listed below in blue font and add the suffix to the base model #

GENERAL

Series: Bioniq
Subseries: Bioniq Round Adjustable
Brand: Prolicht
Division: Architectural
Mounting Type: Recessed
Mounting Location: Ceiling
Subcategory: Downlight

PHYSICAL

Shape: Round
Diameter (mm): 139
Diameter (in): 5 1/2
Height (mm): 137
Height (in): 5 3/8
Ceiling Thickness (mm): 10 / 12.5 / 15
Ceiling Thickness (in): 3/8 or 1/2 or 9/16
Min. Recessing Depth (mm): 150
Min. Recessing Depth (in): 5 7/8
Light Distribution: Adjustable / Downlight
Weight (kg): 0.849
Weight (lbs): 1.87
Fixture Finish: SSR / BKV / CWI / CRY / HAB / LAG / UFT / ITA / RUA / RUR / MIC / FTG / MYG / TWT / LOD / PUS / FRO / FUP / KIA / POP / BLS / SPG / MEY / GOH / GUM / CHC / COM / ABZ / JAG / OBR / MOS / ROR
Fixture Material: Aluminum Die Cast
Cut-out Measurements: 130mm / 5 1/8"

ELECTRICAL

Lamp Type: LED (Zhaga Standard)
Input Wattage (W): 13.2 / 16.5
Total Output Wattage (W): 12 / 14
Dimming: Tri-Mode (Non-Dimming and Phase Dimming (120Vac only) and 0-10V Dimming)
Driver Included: No
Driver Location: Recessed Housing
Driver Type: Constant Current - Universal
Driver Class: Class 2
Housing: See components
Input Voltage (V): 120 - 277
Constant Current (MA): 350

LED

Number of LEDs: 1
Color Temperature (°K): 2700 / 3000 / 3500 / 4000
Max. Delivered Lumen (lm): 810 / 900 / 970 / 990
Nominal Lumen (lm): 960 / 1070 / 1156 / 1180
CRI: >90 CRI
Efficiency (%): 0.905
Lamp Life (hrs): 50000

OPTICAL

Reflector°: 10
Adjustability: Rotational 355°; Tilt 30°

RATINGS AND CERTIFICATIONS

Certified By: Certified for North American Standards
IP rating: IP54

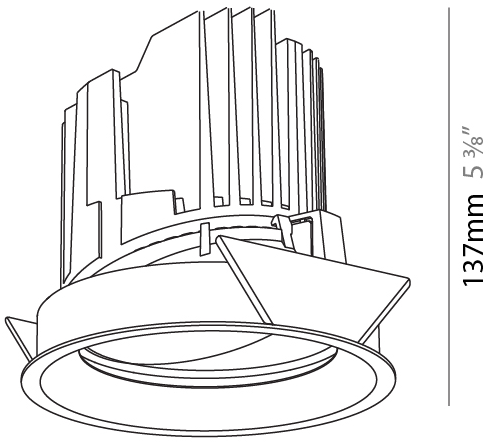

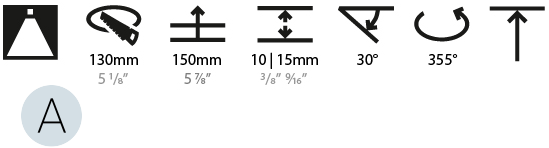

Zaneen Group Inc. © 2024, T 1800-388-3382, F 416-247-9319, www.zaneen.com
Available for International specifications by adding 'INT' at the end of the existing Model #. For assistance on 'custom' specifications, contact zteam@zaneen.com.
In a constant effort to supply the best product, we reserve the right to change specifications or materials without notice. The most recent specification sheets are found at zaneen.com

ZANEEN®

PROJECT	
TYPE	
SPECIFIER	
QUANTITY	
DATE	

BIONIQ ROUND ADJUSTABLE RECESSED

A35245-

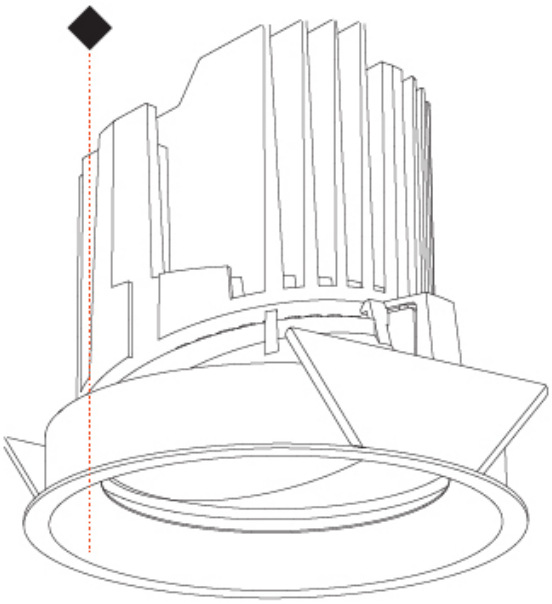

A

Zaneen Group Inc. © 2024, T 1800-388-3382, F 416-247-9319, www.zaneen.com

Available for International specifications by adding 'INT' at the end of the existing Model #. For assistance on 'custom' specifications, contact zteam@zaneen.com.
In a constant effort to supply the best product, we reserve the right to change specifications or materials without notice. The most recent specification sheets are found at zaneen.com

ZANEEN®

BIONIQ ROUND DEEP RECESSED

PROJECT	
TYPE	
SPECIFIER	
QUANTITY	
DATE	

A35278- _____ - _____

base number | Color Temperature | Finishes (Diamond)

1.To build a product code in our configurator select the specify button on the base model # product page
2. To build a manual product code on this datasheet choose from the options listed below in blue font and add the suffix to the base model #

GENERAL

Series: Bioniq
Subseries: Bioniq Round Deep
Brand: Prolicht
Division: Architectural
Mounting Type: Recessed
Mounting Location: Ceiling
Subcategory: Downlight

PHYSICAL

Shape: Round
Diameter (mm): 139
Diameter (in): 5 1/2
Height (mm): 151
Height (in): 5 15/16
Ceiling Thickness (mm): 10 / 12.5 / 15
Ceiling Thickness (in): 3/8 or 1/2 or 9/16
Min. Recessing Depth (mm): 170
Min. Recessing Depth (in): 6 11/16
Light Distribution: Downlight
Weight (kg): 0.921
Weight (lbs): 2.03
Fixture Finish: SSR / BKV / CWI / CRY / HAB / LAG / UFT / ITA / RUA / RUR / MIC / FTG / MYG / TWT / LOD / PUS / FRO / FUP / KIA / POP / BLS / SPG / MEY / GOH / GUM / CHC / COM / ABZ / JAG / OBR / MOS / ROR
Fixture Material: Aluminum Die Cast
Cut-out Measurements: 130mm / 5 1/8"

ELECTRICAL

Lamp Type: LED (Zhaga Standard)
Input Wattage (W): 13.2 / 16.5
Total Output Wattage (W): 12 / 14
Dimming: Tri-Mode (Non-Dimming and Phase Dimming (120Vac only) and 0-10V Dimming)
Driver Included: No
Driver Location: Recessed Housing
Driver Type: Constant Current - Universal
Driver Class: Class 2
Housing: See components
Input Voltage (V): 120 - 277
Constant Current (MA): 350

LED

Number of LEDs: 1
Color Temperature (°K): 2700 / 3000 / 3500 / 4000
Max. Delivered Lumen (lm): 870 / 970 / 1039 / 1060
Nominal Lumen (lm): 960 / 1070 / 1156 / 1180
CRI: >90 CRI
Efficiency (%): 0.905
Lamp Life (hrs): 50000

OPTICAL

Reflector°: 10

RATINGS AND CERTIFICATIONS

Certified By: Certified for North American Standards
IP rating: IP20

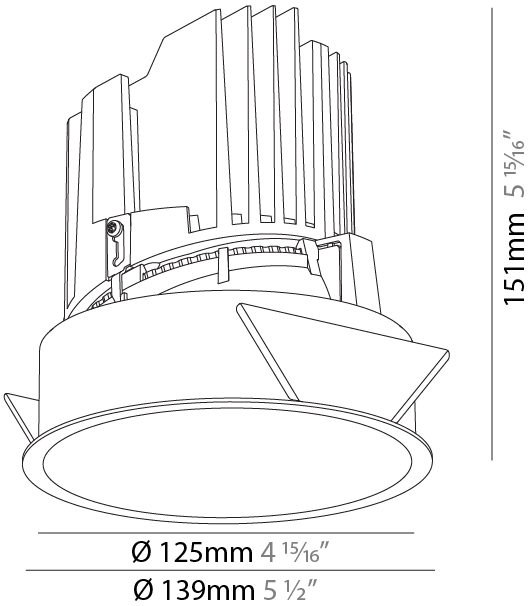

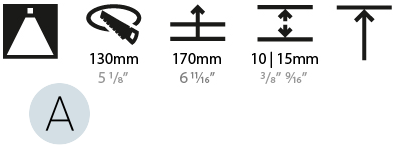

Zaneen Group Inc. © 2024, T 1800-388-3382, F 416-247-9319, www.zaneen.com
Available for International specifications by adding 'INT' at the end of the existing Model #. For assistance on 'custom' specifications, contact zteam@zaneen.com.
In a constant effort to supply the best product, we reserve the right to change specifications or materials without notice. The most recent specification sheets are found at zaneen.com

ZANEEN®

PROJECT	
TYPE	
SPECIFIER	
QUANTITY	
DATE	

BIONIQ ROUND DEEP RECESSED

A35278-

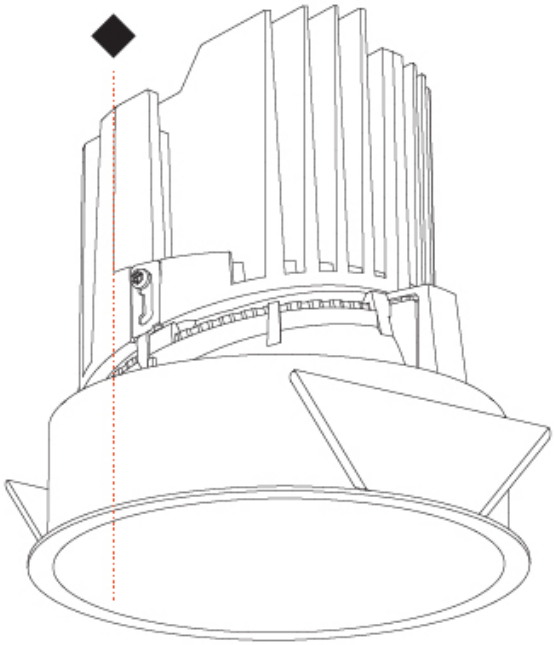

A

Zaneen Group Inc. © 2024, T 1800-388-3382, F 416-247-9319, www.zaneen.com

Available for International specifications by adding 'INT' at the end of the existing Model #. For assistance on 'custom' specifications, contact zteam@zaneen.com.
In a constant effort to supply the best product, we reserve the right to change specifications or materials without notice. The most recent specification sheets are found at zaneen.com

ZANEEN®

PROJECT	
TYPE	
SPECIFIER	
QUANTITY	
DATE	

BIONIQ ROUND DEEP RECESSED

A35287- _____ - _____

base number | Color Temperature | Finishes (Diamond)

1.To build a product code in our configurator select the specify button on the base model # product page
2. To build a manual product code on this datasheet choose from the options listed below in blue font and add the suffix to the base model #

GENERAL

Series: Bioniq
Subseries: Bioniq Round Deep
Brand: Prolicht
Division: Architectural
Mounting Type: Recessed
Mounting Location: Ceiling
Subcategory: Downlight

PHYSICAL

Shape: Round
Diameter (mm): 139
Diameter (in): 5 1/2
Height (mm): 151
Height (in): 5 15/16
Ceiling Thickness (mm): 10 / 12.5 / 15
Ceiling Thickness (in): 3/8 or 1/2 or 9/16
Min. Recessing Depth (mm): 170
Min. Recessing Depth (in): 6 11/16
Light Distribution: Downlight
Weight (kg): 0.946
Weight (lbs): 2.09
Fixture Finish: SSR / BKV / CWI / CRY / HAB / LAG / UFT / ITA / RUA / RUR / MIC / FTG / MYG / TWT / LOD / PUS / FRO / FUP / KIA / POP / BLS / SPG / MEY / GOH / GUM / CHC / COM / ABZ / JAG / OBR / MOS / ROR
Fixture Material: Aluminum Die Cast
Cut-out Measurements: 130mm / 5 1/8"

ELECTRICAL

Lamp Type: LED (Zhaga Standard)
Input Wattage (W): 13.2 / 16.5
Total Output Wattage (W): 12 / 14
Dimming: Tri-Mode (Non-Dimming and Phase Dimming (120Vac only) and 0-10V Dimming)
Driver Included: No
Driver Location: Recessed Housing
Driver Type: Constant Current - Universal
Driver Class: Class 2
Housing: See components
Input Voltage (V): 120 - 277
Constant Current (MA): 350

LED

Number of LEDs: 1
Color Temperature (°K): 2700 / 3000 / 3500 / 4000
Max. Delivered Lumen (lm): 810 / 900 / 970 / 990
Nominal Lumen (lm): 960 / 1070 / 1156 / 1180
CRI: >90 CRI
Efficiency (%): 0.905
Lamp Life (hrs): 50000

OPTICAL

Reflector°: 10

RATINGS AND CERTIFICATIONS

Certified By: Certified for North American Standards
IP rating: IP54

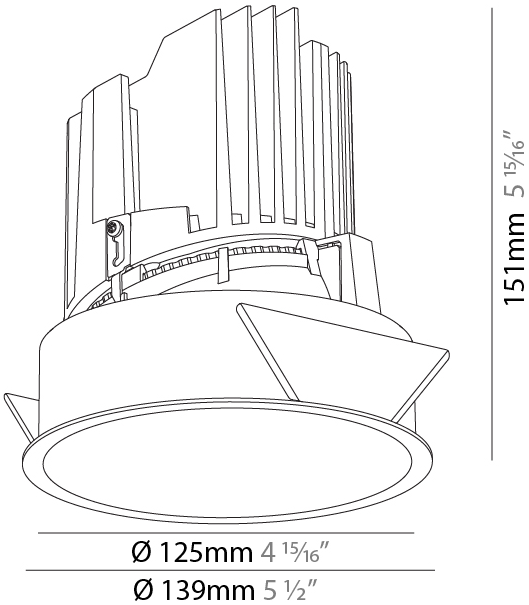

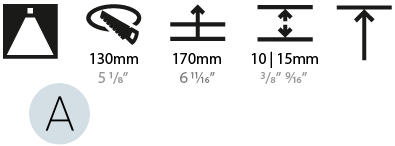

Zaneen Group Inc. © 2024, T 1800-388-3382, F 416-247-9319, www.zaneen.com
Available for International specifications by adding 'INT' at the end of the existing Model #. For assistance on 'custom' specifications, contact zteam@zaneen.com.
In a constant effort to supply the best product, we reserve the right to change specifications or materials without notice. The most recent specification sheets are found at zaneen.com

ZANEEN®

PROJECT	
TYPE	
SPECIFIER	
QUANTITY	
DATE	

BIONIQ ROUND DEEP RECESSED

A35287-

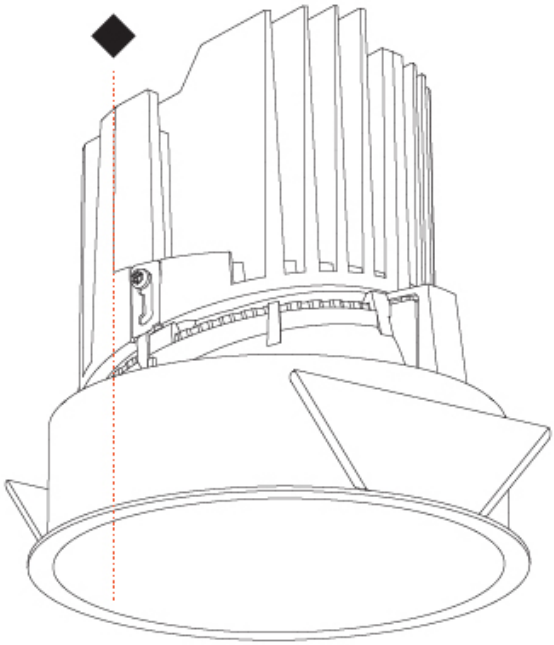

A

Zaneen Group Inc. © 2024, T 1800-388-3382, F 416-247-9319, www.zaneen.com

Available for International specifications by adding 'INT' at the end of the existing Model #. For assistance on 'custom' specifications, contact zteam@zaneen.com.
In a constant effort to supply the best product, we reserve the right to change specifications or materials without notice. The most recent specification sheets are found at zaneen.com

ZANEEN®

PROJECT	
TYPE	
SPECIFIER	
QUANTITY	
DATE	

BIONIQ ROUND SEMI ADJUSTABLE RECESSED

A35290- _____ - _____

base number | Color Temperature | Finishes (Diamond)

1.To build a product code in our configurator select the specify button on the base model # product page
2. To build a manual product code on this datasheet choose from the options listed below in blue font and add the suffix to the base model #

GENERAL

Series: Bioniq
Subseries: Bioniq Round Semi Adjustable
Brand: Prolicht
Division: Architectural
Mounting Type: Recessed
Mounting Location: Ceiling
Subcategory: Downlight

PHYSICAL

Shape: Round
Diameter (mm): 107
Diameter (in): 4 3/16
Height (mm): 112
Height (in): 4 7/16
Ceiling Thickness (mm): 10 / 12.5 / 15
Ceiling Thickness (in): 3/8 or 1/2 or 9/16
Min. Recessing Depth (mm): 130
Min. Recessing Depth (in): 5 1/8
Light Distribution: Adjustable / Downlight
Weight (kg): 0.488
Weight (lbs): 1.08
Fixture Finish: SSR / BKV / CWI / CRY / HAB / LAG / UFT / ITA / RUA / RUR / MIC / FTG / MYG / TWT / LOD / PUS / FRO / FUP / KIA / POP / BLS / SPG / MEY / GOH / GUM / CHC / COM / ABZ / JAG / OBR / MOS / ROR
Fixture Material: Aluminum Die Cast
Cut-out Measurements: 98mm / 3 7/8"

ELECTRICAL

Lamp Type: LED (Zhaga Standard)
Input Wattage (W): 13.2 / 16.5
Total Output Wattage (W): 12 / 14
Dimming: Tri-Mode (Non-Dimming and Phase Dimming (120Vac only) and 0-10V Dimming)
Driver Included: No
Driver Location: Recessed Housing
Driver Type: Constant Current - Universal
Driver Class: Class 2
Housing: See components
Input Voltage (V): 120 - 277
Constant Current (MA): 350

LED

Number of LEDs: 1
Color Temperature (°K): 2700 / 3000 / 3500 / 4000
Max. Delivered Lumen (lm): 850 / 950 / 1029 / 1050
Nominal Lumen (lm): 960 / 1070 / 1156 / 1180
CRI: >90 CRI
Efficiency (%): 0.885
Lamp Life (hrs): 50000

OPTICAL

Reflector°: 10
Adjustability: Rotational 355°; Tilt 10°

RATINGS AND CERTIFICATIONS

Certified By: Certified for North American Standards
IP rating: IP20

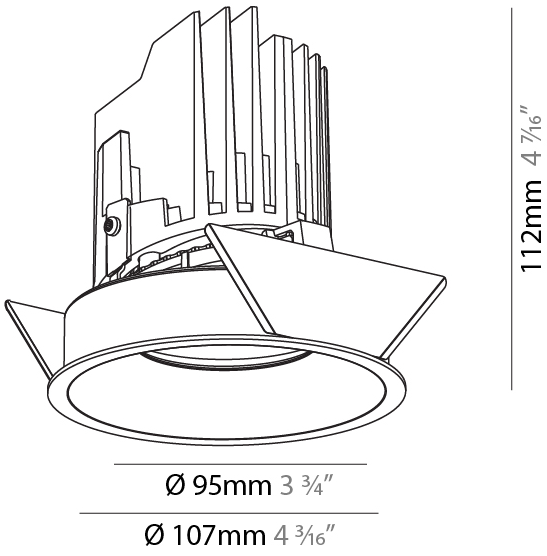

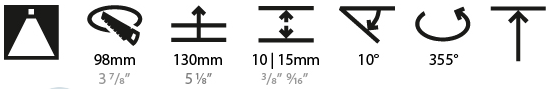

A

Zaneen Group Inc. © 2024, T 1800-388-3382, F 416-247-9319, www.zaneen.com
Available for International specifications by adding 'INT' at the end of the existing Model #. For assistance on 'custom' specifications, contact zteam@zaneen.com.
In a constant effort to supply the best product, we reserve the right to change specifications or materials without notice. The most recent specification sheets are found at zaneen.com

ZANEEN®

PROJECT	
TYPE	
SPECIFIER	
QUANTITY	
DATE	

BIONIQ ROUND SEMI ADJUSTABLE RECESSED

A35290-

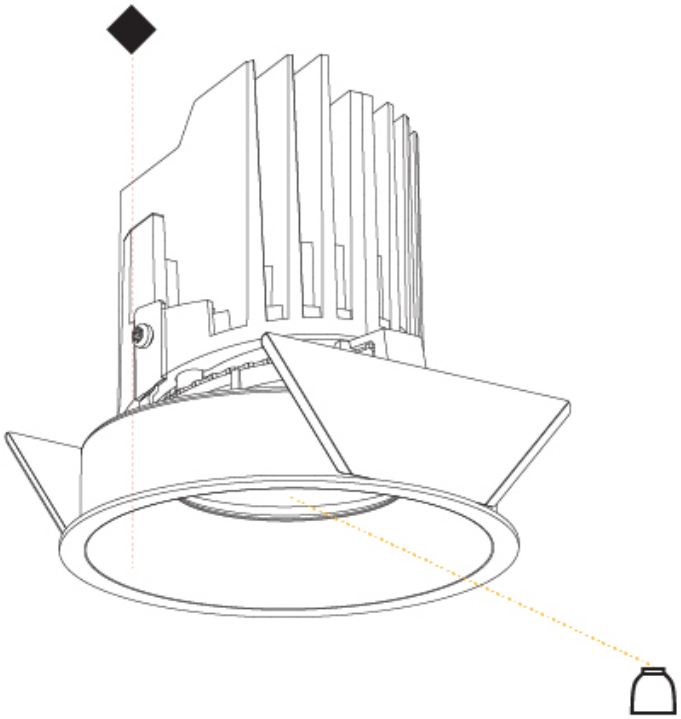

A

Zaneen Group Inc. © 2024, T 1800-388-3382, F 416-247-9319, www.zaneen.com

Available for International specifications by adding 'INT' at the end of the existing Model #. For assistance on 'custom' specifications, contact zteam@zaneen.com.
In a constant effort to supply the best product, we reserve the right to change specifications or materials without notice. The most recent specification sheets are found at zaneen.com

ZANEEN®

PROJECT	
TYPE	
SPECIFIER	
QUANTITY	
DATE	

BIONIQ ROUND SEMI ADJUSTABLE RECESSED

A35299- _____ - _____

base number | Color Temperature | Finishes (Diamond)

1.To build a product code in our configurator select the specify button on the base model # product page
2. To build a manual product code on this datasheet choose from the options listed below in blue font and add the suffix to the base model #

GENERAL

Series: Bioniq
Subseries: Bioniq Round Semi Adjustable
Brand: Prolicht
Division: Architectural
Mounting Type: Recessed
Mounting Location: Ceiling
Subcategory: Downlight

PHYSICAL

Shape: Round
Diameter (mm): 139
Diameter (in): 5 1/2
Height (mm): 137
Height (in): 5 3/8
Ceiling Thickness (mm): 10 / 12.5 / 15
Ceiling Thickness (in): 3/8 or 1/2 or 9/16
Min. Recessing Depth (mm): 150
Min. Recessing Depth (in): 5 7/8
Light Distribution: Adjustable / Downlight
Weight (kg): 0.814
Weight (lbs): 1.79
Fixture Finish: SSR / BKV / CWI / CRY / HAB / LAG / UFT / ITA / RUA / RUR / MIC / FTG / MYG / TWT / LOD / PUS / FRO / FUP / KIA / POP / BLS / SPG / MEY / GOH / GUM / CHC / COM / ABZ / JAG / OBR / MOS / ROR
Fixture Material: Aluminum Die Cast
Cut-out Measurements: 130mm / 5 1/8"

ELECTRICAL

Lamp Type: LED (Zhaga Standard)
Input Wattage (W): 13.2 / 16.5
Total Output Wattage (W): 12 / 14
Dimming: Tri-Mode (Non-Dimming and Phase Dimming (120Vac only) and 0-10V Dimming)
Driver Included: No
Driver Location: Recessed Housing
Driver Type: Constant Current - Universal
Driver Class: Class 2
Housing: See components
Input Voltage (V): 120 - 277
Constant Current (MA): 350

LED

Number of LEDs: 1
Color Temperature (°K): 2700 / 3000 / 3500 / 4000
Max. Delivered Lumen (lm): 870 / 970 / 1039 / 1060
Nominal Lumen (lm): 960 / 1070 / 1156 / 1180
CRI: >90 CRI
Efficiency (%): 90.5
Lamp Life (hrs): 50000

OPTICAL

Reflector°: 10
Adjustability: Rotational 355°; Tilt 10°

RATINGS AND CERTIFICATIONS

Certified By: Certified for North American Standards
IP rating: IP20

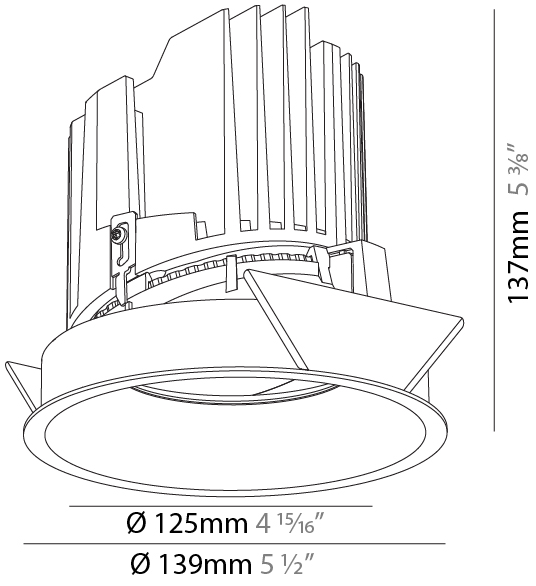

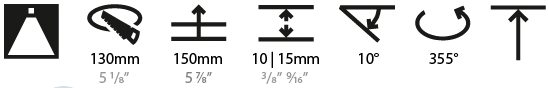

A

Zaneen Group Inc. © 2024, T 1800-388-3382, F 416-247-9319, www.zaneen.com
Available for International specifications by adding 'INT' at the end of the existing Model #. For assistance on 'custom' specifications, contact zteam@zaneen.com.
In a constant effort to supply the best product, we reserve the right to change specifications or materials without notice. The most recent specification sheets are found at zaneen.com

ZANEEN®

PROJECT	
TYPE	
SPECIFIER	
QUANTITY	
DATE	

BIONIQ ROUND SEMI ADJUSTABLE RECESSED

A35299-

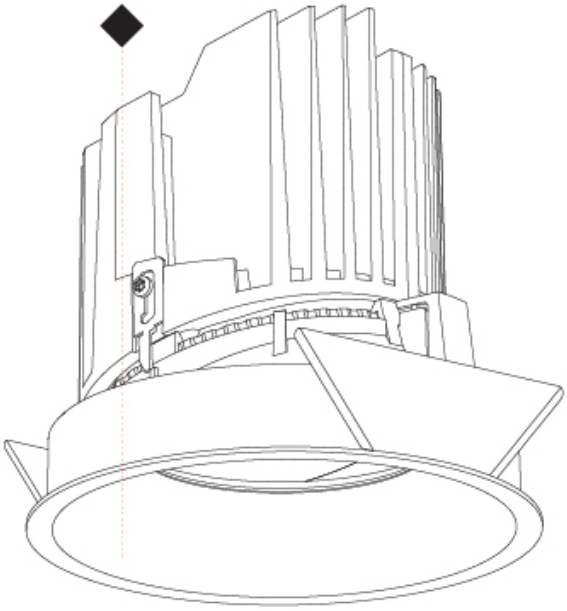

A

Zaneen Group Inc. © 2024, T 1800-388-3382, F 416-247-9319, www.zaneen.com

Available for International specifications by adding 'INT' at the end of the existing Model #. For assistance on 'custom' specifications, contact zteam@zaneen.com.
In a constant effort to supply the best product, we reserve the right to change specifications or materials without notice. The most recent specification sheets are found at zaneen.com

ZANEEN®

PROJECT	
TYPE	
SPECIFIER	
QUANTITY	
DATE	

BIONIQ ROUND SEMI ADJUSTABLE RECESSED

A35302- _____ - _____

base number | Color Temperature | Finishes (Diamond)

1.To build a product code in our configurator select the specify button on the base model # product page
2. To build a manual product code on this datasheet choose from the options listed below in blue font and add the suffix to the base model #

GENERAL

Series: Bioniq
Subseries: Bioniq Round Semi Adjustable
Brand: Prolicht
Division: Architectural
Mounting Type: Recessed
Mounting Location: Ceiling
Subcategory: Downlight

PHYSICAL

Shape: Round
Diameter (mm): 107
Diameter (in): 4 3/16
Height (mm): 112
Height (in): 4 7/16
Ceiling Thickness (mm): 10 / 12.5 / 15
Ceiling Thickness (in): 3/8 or 1/2 or 9/16
Min. Recessing Depth (mm): 130
Min. Recessing Depth (in): 5 1/8
Light Distribution: Adjustable / Downlight
Weight (kg): 0.452
Weight (lbs): 1
Fixture Finish: SSR / BKV / CWI / CRY / HAB / LAG / UFT / ITA / RUA / RUR / MIC / FTG / MYG / TWT / LOD / PUS / FRO / FUP / KIA / POP / BLS / SPG / MEY / GOH / GUM / CHC / COM / ABZ / JAG / OBR / MOS / ROR
Fixture Material: Aluminum Die Cast
Cut-out Measurements: 98mm / 3 7/8"

ELECTRICAL

Lamp Type: LED (Zhaga Standard)
Input Wattage (W): 13.2 / 16.5
Total Output Wattage (W): 12 / 14
Dimming: Tri-Mode (Non-Dimming and Phase Dimming (120Vac only) and 0-10V Dimming)
Driver Included: No
Driver Location: Recessed Housing
Driver Type: Constant Current - Universal
Driver Class: Class 2
Housing: See components
Input Voltage (V): 120 - 277
Constant Current (MA): 350

LED

Number of LEDs: 1
Color Temperature (°K): 2700 / 3000 / 3500 / 4000
Max. Delivered Lumen (lm): 790 / 880 / 950 / 970
Nominal Lumen (lm): 960 / 1070 / 1156 / 1180
CRI: >90 CRI
Efficiency (%): 88.5
Lamp Life (hrs): 50000

OPTICAL

Reflector°: 10
Adjustability: Rotational 355°; Tilt 10°

RATINGS AND CERTIFICATIONS

Certified By: Certified for North American Standards
IP rating: IP54

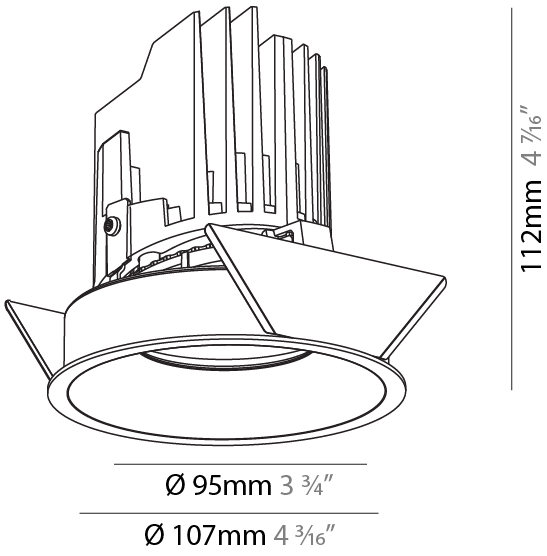

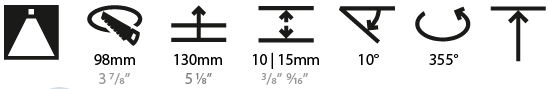

A

Zaneen Group Inc. © 2024, T 1800-388-3382, F 416-247-9319, www.zaneen.com
Available for International specifications by adding 'INT' at the end of the existing Model #. For assistance on 'custom' specifications, contact zteam@zaneen.com.
In a constant effort to supply the best product, we reserve the right to change specifications or materials without notice. The most recent specification sheets are found at zaneen.com

ZANEEN®

PROJECT	
TYPE	
SPECIFIER	
QUANTITY	
DATE	

BIONIQ ROUND SEMI ADJUSTABLE RECESSED

A35302-

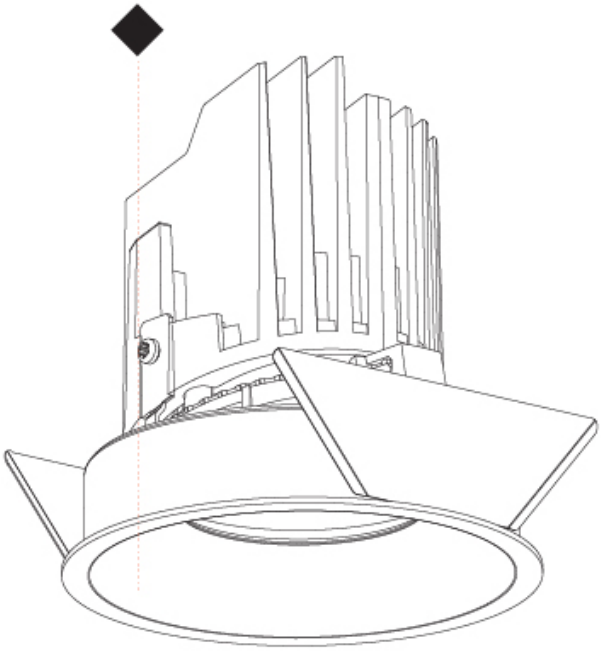

A

Zaneen Group Inc. © 2024, T 1800-388-3382, F 416-247-9319, www.zaneen.com

Available for International specifications by adding 'INT' at the end of the existing Model #. For assistance on 'custom' specifications, contact zteam@zaneen.com.
In a constant effort to supply the best product, we reserve the right to change specifications or materials without notice. The most recent specification sheets are found at zaneen.com

ZANEEN®

PROJECT	
TYPE	
SPECIFIER	
QUANTITY	
DATE	

BIONIQ ROUND SEMI ADJUSTABLE RECESSED

A35311- _____ - _____

base number | Color Temperature | Finishes (Diamond)

1.To build a product code in our configurator select the specify button on the base model # product page
2. To build a manual product code on this datasheet choose from the options listed below in blue font and add the suffix to the base model #

GENERAL

Series: Bioniq
Subseries: Bioniq Round Semi Adjustable
Brand: Prolicht
Division: Architectural
Mounting Type: Recessed
Mounting Location: Ceiling
Subcategory: Downlight

PHYSICAL

Shape: Round
Diameter (mm): 139
Diameter (in): 5 1/2
Height (mm): 137
Height (in): 5 3/8
Ceiling Thickness (mm): 10 / 12.5 / 15
Ceiling Thickness (in): 3/8 or 1/2 or 9/16
Min. Recessing Depth (mm): 150
Min. Recessing Depth (in): 5 7/8
Light Distribution: Adjustable / Downlight
Weight (kg): 0.851
Weight (lbs): 1.88
Fixture Finish: SSR / BKV / CWI / CRY / HAB / LAG / UFT / ITA / RUA / RUR / MIC / FTG / MYG / TWT / LOD / PUS / FRO / FUP / KIA / POP / BLS / SPG / MEY / GOH / GUM / CHC / COM / ABZ / JAG / OBR / MOS / ROR
Fixture Material: Aluminum Die Cast
Cut-out Measurements: 130mm / 5 1/8"

ELECTRICAL

Lamp Type: LED (Zhaga Standard)
Input Wattage (W): 13.2 / 16.5
Total Output Wattage (W): 12 / 14
Dimming: Tri-Mode (Non-Dimming and Phase Dimming (120Vac only) and 0-10V Dimming)
Driver Included: No
Driver Location: Recessed Housing
Driver Type: Constant Current - Universal
Driver Class: Class 2
Housing: See components
Input Voltage (V): 120 - 277
Constant Current (MA): 350

LED

Number of LEDs: 1
Color Temperature (°K): 2700 / 3000 / 3500 / 4000
Max. Delivered Lumen (lm): 810 / 900 / 970 / 990
Nominal Lumen (lm): 960 / 1070 / 1156 / 1180
CRI: >90 CRI
Efficiency (%): 0.905
Lamp Life (hrs): 50000

OPTICAL

Reflector°: 10
Adjustability: Rotational 355°; Tilt 10°

RATINGS AND CERTIFICATIONS

Certified By: Certified for North American Standards
IP rating: IP54

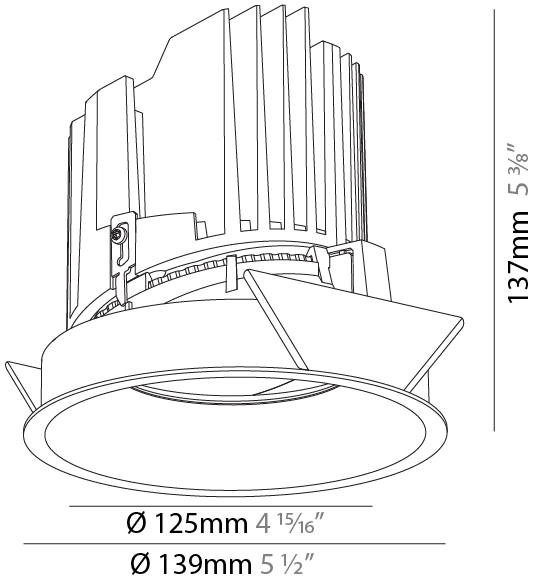

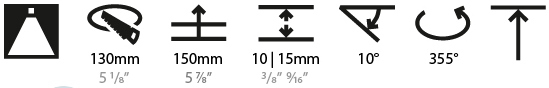

A

Zaneen Group Inc. © 2024, T 1800-388-3382, F 416-247-9319, www.zaneen.com
Available for International specifications by adding 'INT' at the end of the existing Model #. For assistance on 'custom' specifications, contact zteam@zaneen.com.
In a constant effort to supply the best product, we reserve the right to change specifications or materials without notice. The most recent specification sheets are found at zaneen.com

ZANEEN®

PROJECT	
TYPE	
SPECIFIER	
QUANTITY	
DATE	

BIONIQ ROUND SEMI ADJUSTABLE RECESSED

A35311-

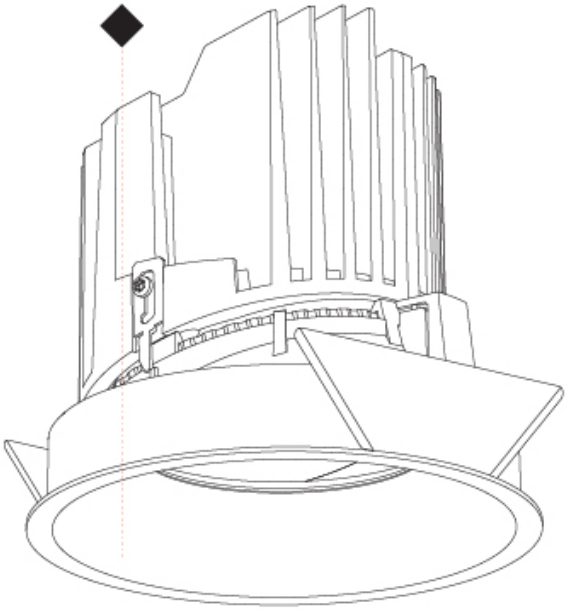

A

Zaneen Group Inc. © 2024, T 1800-388-3382, F 416-247-9319, www.zaneen.com

Available for International specifications by adding 'INT' at the end of the existing Model #. For assistance on 'custom' specifications, contact zteam@zaneen.com.
In a constant effort to supply the best product, we reserve the right to change specifications or materials without notice. The most recent specification sheets are found at zaneen.com

ZANEEN®

PROJECT	
TYPE	
SPECIFIER	
QUANTITY	
DATE	

BIONIQ ROUND WALLWASH RECESSED

A35338- _____ - _____ - _____

base number | Color Temperature | Finishes (Diamond) | Reflector Options

1.To build a product code in our configurator select the specify button on the base model # product page
2. To build a manual product code on this datasheet choose from the options listed below in blue font and add the suffix to the base model #

GENERAL

Series: Bioniq
Subseries: Bioniq Round Wallwash
Brand: Prolicht
Division: Architectural
Mounting Type: Recessed
Mounting Location: Ceiling
Subcategory: Wallwash

PHYSICAL

Shape: Round
Diameter (mm): 107
Diameter (in): 4 3/16
Height (mm): 118
Height (in): 4 5/8
Ceiling Thickness (mm): 10 / 12.5 / 15
Ceiling Thickness (in): 3/8 or 1/2 or 9/16
Min. Recessing Depth (mm): 140
Min. Recessing Depth (in): 5 1/2
Light Distribution: Adjustable / Asymmetric
Weight (kg): 0.473
Weight (lbs): 1.04
Fixture Finish: SSR / BKV / CWI / CRY / HAB / LAG / UFT / ITA / RUA / RUR / MIC / FTG / MYG / TWT / LOD / PUS / FRO / FUP / KIA / POP / BLS / SPG / MEY / GOH / GUM / CHC / COM / ABZ / JAG / OBR / MOS / ROR
Fixture Material: Aluminum Die Cast
Cut-out Measurements: 98mm / 3 7/8"

ELECTRICAL

Lamp Type: LED (Zhaga Standard)
Input Wattage (W): 16.5
Total Output Wattage (W): 14
Dimming: Tri-Mode (Non-Dimming and Phase Dimming (120Vac only) and 0-10V Dimming)
Driver Included: No
Driver Location: Recessed Housing
Driver Type: Constant Current - Universal
Driver Class: Class 2
Housing: See components
Input Voltage (V): 120 - 277
Constant Current (MA): 350

LED

Number of LEDs: 1
Color Temperature (°K): 2700 / 3000 / 3500 / 4000
Max. Delivered Lumen (lm): 1030 / 1070 / 1117 / 1140
Nominal Lumen (lm): 1386 / 1438 / 1511 / 1542
CRI: >90 CRI
Lamp Life (hrs): 50000

OPTICAL

Reflector°: 20 / 40 / 60
Adjustability: Fixed

RATINGS AND CERTIFICATIONS

Certified By: Certified for North American Standards
IP rating: IP20

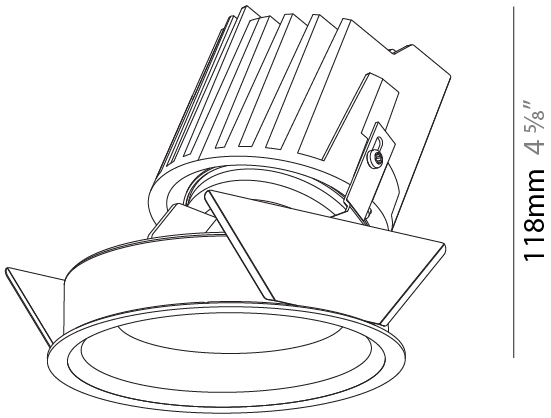

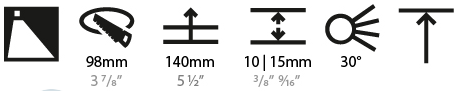

A

Zaneen Group Inc. © 2024, T 1800-388-3382, F 416-247-9319, www.zaneen.com
Available for International specifications by adding 'INT' at the end of the existing Model #. For assistance on 'custom' specifications, contact zteam@zaneen.com.
In a constant effort to supply the best product, we reserve the right to change specifications or materials without notice. The most recent specification sheets are found at zaneen.com

ZANEEN®

PROJECT	
TYPE	
SPECIFIER	
QUANTITY	
DATE	

BIONIQ ROUND WALLWASH RECESSED

A35338-

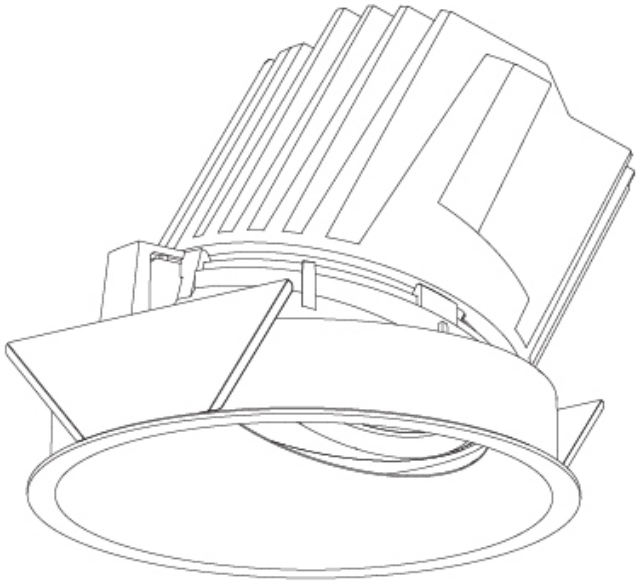

A

Zaneen Group Inc. © 2024, T 1800-388-3382, F 416-247-9319, www.zaneen.com

Available for International specifications by adding 'INT' at the end of the existing Model #. For assistance on 'custom' specifications, contact zteam@zaneen.com.
In a constant effort to supply the best product, we reserve the right to change specifications or materials without notice. The most recent specification sheets are found at zaneen.com

ZANEEN®

PROJECT	
TYPE	
SPECIFIER	
QUANTITY	
DATE	

BIONIQ ROUND WALLWASH RECESSED

A35344- _____ - _____

base number | Color Temperature | Finishes (Diamond)

1.To build a product code in our configurator select the specify button on the base model # product page
2. To build a manual product code on this datasheet choose from the options listed below in blue font and add the suffix to the base model #

GENERAL

Series: Bioniq
Subseries: Bioniq Round Wallwash
Brand: Prolicht
Division: Architectural
Mounting Type: Recessed
Mounting Location: Ceiling
Subcategory: Wallwash

PHYSICAL

Shape: Round
Diameter (mm): 139
Diameter (in): 5 1/2
Height (mm): 126
Height (in): 4 15/16
Ceiling Thickness (mm): 10 / 12.5 / 15
Ceiling Thickness (in): 3/8 or 1/2 or 9/16
Min. Recessing Depth (mm): 140
Min. Recessing Depth (in): 5 1/2
Light Distribution: Adjustable / Asymmetric
Weight (kg): 0.811
Weight (lbs): 1.79
Fixture Finish: SSR / BKV / CWI / CRY / HAB / LAG / UFT / ITA / RUA / RUR / MIC / FTG / MYG / TWT / LOD / PUS / FRO / FUP / KIA / POP / BLS / SPG / MEY / GOH / GUM / CHC / COM / ABZ / JAG / OBR / MOS / ROR
Fixture Material: Aluminum Die Cast
Cut-out Measurements: 130mm / 5 1/8"

ELECTRICAL

Lamp Type: LED (Zhaga Standard)
Input Wattage (W): 13.2 / 16.5
Total Output Wattage (W): 12 / 14
Dimming: Tri-Mode (Non-Dimming and Phase Dimming (120Vac only) and 0-10V Dimming)
Driver Included: No
Driver Location: Recessed Housing
Driver Type: Constant Current - Universal
Driver Class: Class 2
Housing: See components
Input Voltage (V): 120 - 277
Constant Current (MA): 350

LED

Number of LEDs: 1
Color Temperature (°K): 2700 / 3000 / 3500 / 4000
Max. Delivered Lumen (lm): 690 / 760 / 823 / 840
Nominal Lumen (lm): 960 / 1070 / 1156 / 1180
CRI: >90 CRI
Lamp Life (hrs): 50000

OPTICAL

Reflector°: 10
Adjustability: Fixed

RATINGS AND CERTIFICATIONS

Certified By: Certified for North American Standards
IP rating: IP20

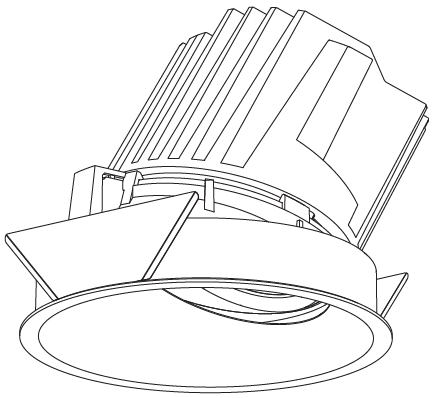

126mm 4 15/16"

Ø 125mm 4 15/16"

Ø 139mm 5 1/2"

130mm 5 1/8" | 140mm 5 1/2" | 10 | 15mm 3/8" 9/16" | 30°

A

Zaneen Group Inc. © 2024, T 1800-388-3382, F 416-247-9319, www.zaneen.com

Available for International specifications by adding 'INT' at the end of the existing Model #. For assistance on 'custom' specifications, contact zteam@zaneen.com.
In a constant effort to supply the best product, we reserve the right to change specifications or materials without notice. The most recent specification sheets are found at zaneen.com

ZANEEN®

PROJECT	
TYPE	
SPECIFIER	
QUANTITY	
DATE	

BIONIQ ROUND WALLWASH RECESSED

A35344-

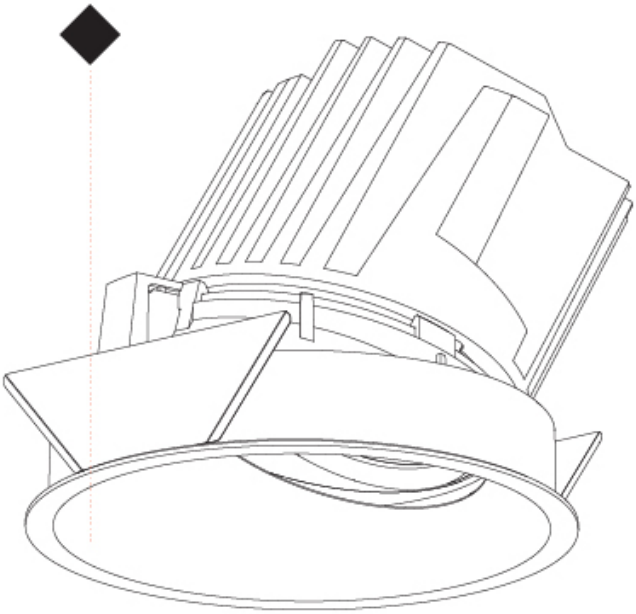

A

Zaneen Group Inc. © 2024, T 1800-388-3382, F 416-247-9319, www.zaneen.com

Available for International specifications by adding 'INT' at the end of the existing Model #. For assistance on 'custom' specifications, contact zteam@zaneen.com.
In a constant effort to supply the best product, we reserve the right to change specifications or materials without notice. The most recent specification sheets are found at zaneen.com

ZANEEN®

PROJECT	
TYPE	
SPECIFIER	
QUANTITY	
DATE	

BIONIQ ROUND ADJUSTABLE TRIMLESS

A35527- _____ - _____ - _____

base number | Finishes (Diamond) | Ceiling Thickness | Reflector Options

1.To build a product code in our configurator select the specify button on the base model # product page
2. To build a manual product code on this datasheet choose from the options listed below in blue font and add the suffix to the base model #

GENERAL

Series: Bioniq
Subseries: Bioniq Round Adjustable
Brand: Prolicht
Division: Architectural
Mounting Type: Trimless
Mounting Location: Ceiling
Subcategory: Downlight

PHYSICAL

Shape: Round
Diameter (mm): 107
Diameter (in): 4 3/16
Height (mm): 112
Height (in): 4 7/16
Ceiling Thickness (mm): 10 / 12.5 / 15 / 25
Ceiling Thickness (in): 3/8 or 1/2 or 9/16 or 1
Min. Recessing Depth (mm): 130
Min. Recessing Depth (in): 5 1/8
Light Distribution: Adjustable / Downlight
Weight (kg): 0.583
Weight (lbs): 1.28
Fixture Finish: SSR / BKV / CWI / CRY / HAB / LAG / UFT / ITA / RUA / RUR / MIC / FTG / MYG / TWT / LOD / PUS / FRO / FUP / KIA / POP / BLS / SPG / MEY / GOH / GUM / CHC / COM / ABZ / JAG / OBR / MOS / ROR
Fixture Material: Aluminum Die Cast
Cut-out Measurements: ⊠111mm/4 3/8"
Upon Request: Unique Ceiling Thickness

ELECTRICAL

Lamp Type: LED (Zhaga Standard)
Input Wattage (W): 16.5
Total Output Wattage (W): 14.7
Dimming: Dali Dimming
Driver Location: Recessed Housing
Driver Type: Constant Current - 120Vac
Driver Class: Class 2
Housing: See Components
Input Voltage (V): 120
Constant Current (MA): 350

LED

Number of LEDs: 1
Max. Delivered Lumen (lm): 770
Nominal Lumen (lm): 1140
CRI: >90 CRI
Lamp Life (hrs): 50000
Upon Request: RGB-W Tunable White Special Color Temperature Special LED

OPTICAL

Reflector°: 20 / 40 / 60
Adjustability: Rotational 355°; Tilt 30°
Upon Request: Special Beam Angles

RATINGS AND CERTIFICATIONS

Certified By: Certified for North American Standards
IP rating: IP20

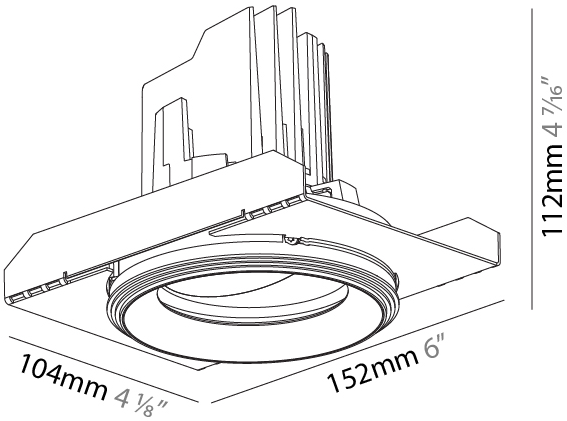

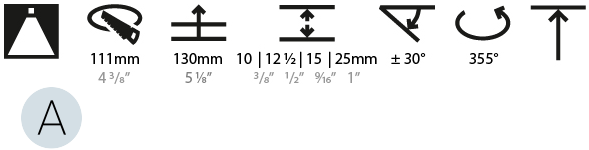

Zaneen Group Inc. © 2024, T 1800-388-3382, F 416-247-9319, www.zaneen.com
Available for International specifications by adding 'INT' at the end of the existing Model #. For assistance on 'custom' specifications, contact zteam@zaneen.com.
In a constant effort to supply the best product, we reserve the right to change specifications or materials without notice. The most recent specification sheets are found at zaneen.com

ZANEEN®

PROJECT	
TYPE	
SPECIFIER	
QUANTITY	
DATE	

BIONIQ ROUND ADJUSTABLE TRIMLESS

A35527-

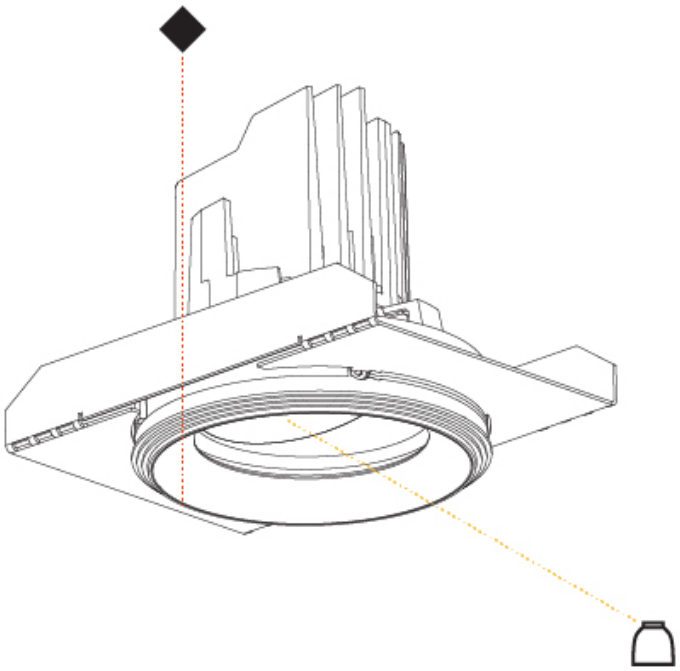

A

Zaneen Group Inc. © 2024, T 1800-388-3382, F 416-247-9319, www.zaneen.com

Available for International specifications by adding 'INT' at the end of the existing Model #. For assistance on 'custom' specifications, contact zteam@zaneen.com.
In a constant effort to supply the best product, we reserve the right to change specifications or materials without notice. The most recent specification sheets are found at zaneen.com

ZANEEN®

PROJECT	
TYPE	
SPECIFIER	
QUANTITY	
DATE	

BIONIQ ROUND SEMI ADJUSTABLE TRIMLESS

A35528- _____ - _____ - _____ - _____

base number | Finishes (Diamond) | Ceiling Thickness | Reflector Options | Lens Options

1.To build a product code in our configurator select the specify button on the base model # product page
2. To build a manual product code on this datasheet choose from the options listed below in blue font and add the suffix to the base model #

GENERAL

Series: Bioniq
Subseries: Bioniq Round Semi Adjustable
Brand: Prolicht
Division: Architectural
Mounting Type: Trimless
Mounting Location: Ceiling
Subcategory: Downlight

PHYSICAL

Shape: Round
Diameter (mm): 107
Diameter (in): 4 3/16
Height (mm): 130
Height (in): 5 1/8
Ceiling Thickness (mm): 10 / 12.5 / 15 / 25
Ceiling Thickness (in): 3/8 or 1/2 or 9/16 or 1
Min. Recessing Depth (mm): 150
Min. Recessing Depth (in): 5 7/8
Light Distribution: Downlight
Weight (kg): 0.646
Weight (lbs): 1.42
Fixture Finish: SSR / BKV / CWI / CRY / HAB / LAG / UFT / ITA / RUA / RUR / MIC / FTG / MYG / TWT / LOD / PUS / FRO / FUP / KIA / POP / BLS / SPG / MEY / GOH / GUM / CHC / COM / ABZ / JAG / OBR / MOS / ROR
Fixture Material: Aluminum Die Cast
Cut-out Measurements: ⊠ 111mm / 4 3/8"
Upon Request: Unique Ceiling Thickness

ELECTRICAL

Lamp Type: LED (Zhaga Standard)
Input Wattage (W): 15
Total Output Wattage (W): 14.7
Dimming: Dali Dimming
Driver Included: No
Driver Location: Recessed Housing
Driver Type: Constant Current - 120Vac
Driver Class: Class 2
Housing: See components
Input Voltage (V): 120
Constant Current (MA): 350

LED

Number of LEDs: 1
Color Temperature (°K): Warm Dim
Max. Delivered Lumen (lm): 766
Nominal Lumen (lm): 1140
CRI: >90 CRI
Lamp Life (hrs): 50000
Upon Request: RGB-W Tunable White Special Color Temperature Special LED

OPTICAL

Reflector°: 18 / 42 / 60
Optic°: Lens Pack - No Lens / Linear Spread Lens / Honeycomb / Spread Lens
Upon Request: Special Beam Angles

RATINGS AND CERTIFICATIONS

Certified By: Certified for North American Standards
IP rating: IP20

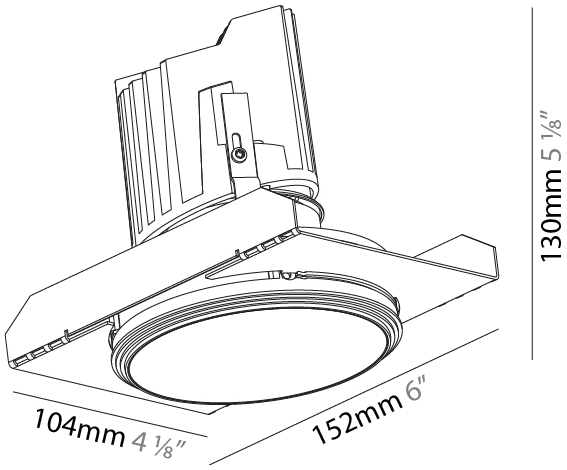

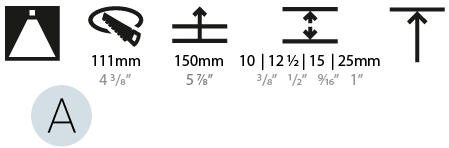

Zaneen Group Inc. © 2024, T 1800-388-3382, F 416-247-9319, www.zaneen.com
Available for international specifications by adding 'INT' at the end of the existing Model #. For assistance on 'custom' specifications, contact zteam@zaneen.com.
In a constant effort to supply the best product, we reserve the right to change specifications or materials without notice. The most recent specification sheets are found at zaneen.com

ZANEEN®

PROJECT	
TYPE	
SPECIFIER	
QUANTITY	
DATE	

BIONIQ ROUND SEMI ADJUSTABLE TRIMLESS

A35528-

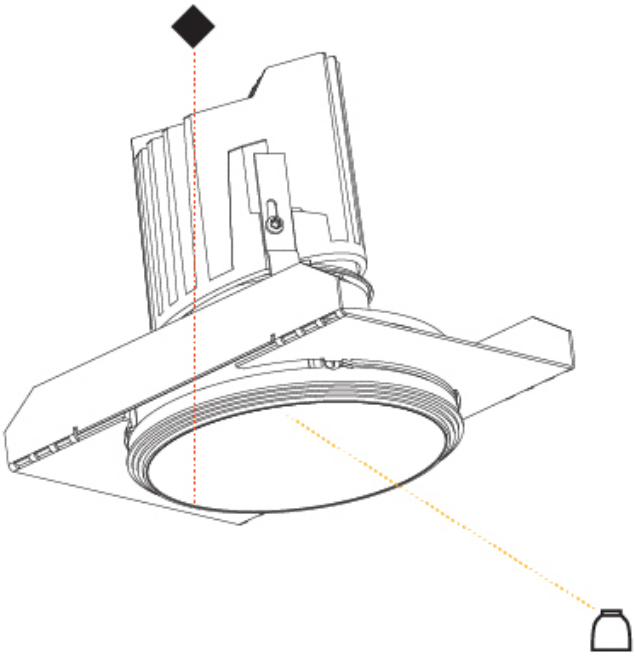

A

Zaneen Group Inc. © 2024, T 1800-388-3382, F 416-247-9319, www.zaneen.com

Available for International specifications by adding 'INT' at the end of the existing Model #. For assistance on 'custom' specifications, contact zteam@zaneen.com.
In a constant effort to supply the best product, we reserve the right to change specifications or materials without notice. The most recent specification sheets are found at zaneen.com

ZANEEN®

PROJECT	
TYPE	
SPECIFIER	
QUANTITY	
DATE	

BIONIQ ROUND SEMI ADJUSTABLE TRIMLESS

A35529- _____ - _____ - _____

base number | Finishes (Diamond) | Ceiling Thickness | Reflector Options

1.To build a product code in our configurator select the specify button on the base model # product page
2. To build a manual product code on this datasheet choose from the options listed below in blue font and add the suffix to the base model #

GENERAL

Series: Bioniq
Subseries: Bioniq Round Semi Adjustable
Brand: Prolicht
Division: Architectural
Mounting Type: Trimless
Mounting Location: Ceiling
Subcategory: Downlight

PHYSICAL

Shape: Round
Diameter (mm): 107
Diameter (in): 4 3/16
Height (mm): 112
Height (in): 4 7/16
Ceiling Thickness (mm): 10 / 12.5 / 15 / 25
Ceiling Thickness (in): 3/8 or 1/2 or 9/16 or 1
Min. Recessing Depth (mm): 130
Min. Recessing Depth (in): 5 1/8
Light Distribution: Adjustable / Downlight
Weight (kg): 0.609
Weight (lbs): 1.34
Fixture Finish: SSR / BKV / CWI / CRY / HAB / LAG / UFT / ITA / RUA / RUR / MIC / FTG / MYG / TWT / LOD / PUS / FRO / FUP / KIA / POP / BLS / SPG / MEY / GOH / GUM / CHC / COM / ABZ / JAG / OBR / MOS / ROR
Fixture Material: Aluminum Die Cast
Cut-out Measurements: ⊠ 111mm / 4 3/8"
Upon Request: Unique Ceiling Thickness

ELECTRICAL

Lamp Type: LED (Zhaga Standard)
Input Wattage (W): 16.5
Total Output Wattage (W): 14.7
Dimming: Dali Dimming
Driver Included: No
Driver Location: Recessed Housing
Driver Type: Constant Current - 120Vac
Driver Class: Class 2
Housing: See Components
Input Voltage (V): 120
Constant Current (MA): 350

LED

Number of LEDs: 1
Max. Delivered Lumen (lm): 770
Nominal Lumen (lm): 1140
CRI: >90 CRI
Lamp Life (hrs): 50000
Upon Request: RGB-W Tunable White Special Color Temperature Special LED

OPTICAL

Reflector°: 20 / 40 / 60
Adjustability: Rotational 355°; Tilt 10°
Upon Request: Special Beam Angles

RATINGS AND CERTIFICATIONS

Certified By: Certified for North American Standards
IP rating: IP20

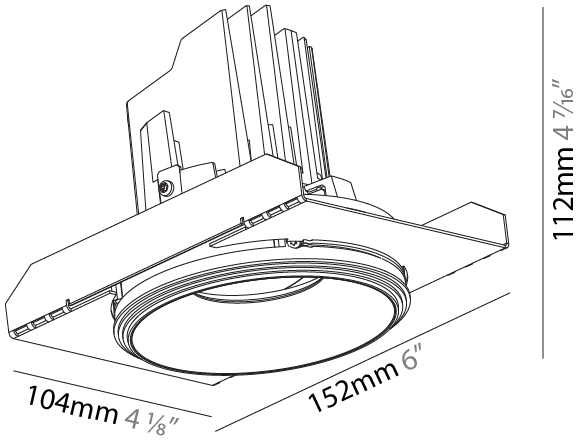

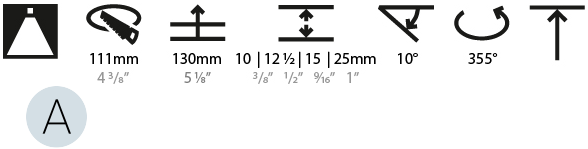

Zaneen Group Inc. © 2024, T 1800-388-3382, F 416-247-9319, www.zaneen.com

Available for International specifications by adding 'INT' at the end of the existing Model #. For assistance on 'custom' specifications, contact zteam@zaneen.com.
In a constant effort to supply the best product, we reserve the right to change specifications or materials without notice. The most recent specification sheets are found at zaneen.com

May 31, 2024, 12:59 am

ZANEEN®

PROJECT	
TYPE	
SPECIFIER	
QUANTITY	
DATE	

BIONIQ ROUND SEMI ADJUSTABLE TRIMLESS

A35529-

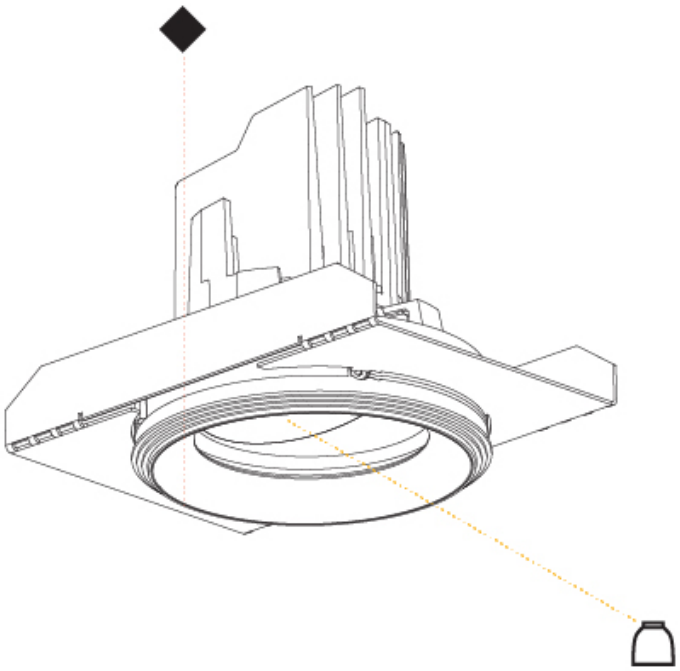

A

Zaneen Group Inc. © 2024, T 1800-388-3382, F 416-247-9319, www.zaneen.com

Available for International specifications by adding 'INT' at the end of the existing Model #. For assistance on 'custom' specifications, contact zteam@zaneen.com.
In a constant effort to supply the best product, we reserve the right to change specifications or materials without notice. The most recent specification sheets are found at zaneen.com

ZANEEN®

PROJECT	
TYPE	
SPECIFIER	
QUANTITY	
DATE	

BIONIQ ROUND ADJUSTABLE RECESSED

A35542- _____ - _____

base number | Finishes (Diamond) | Reflector Options

1.To build a product code in our configurator select the specify button on the base model # product page
2. To build a manual product code on this datasheet choose from the options listed below in blue font and add the suffix to the base model #

GENERAL

Series: Bioniq
Subseries: Bioniq Round Adjustable
Brand: Prolicht
Division: Architectural
Mounting Type: Recessed
Mounting Location: Ceiling
Subcategory: Downlight

PHYSICAL

Shape: Round
Diameter (mm): 107
Diameter (in): 4 3/16
Height (mm): 112
Height (in): 4 7/16
Min. Recessing Depth (mm): 130
Min. Recessing Depth (in): 5 1/8
Light Distribution: Adjustable / Downlight
Weight (kg): 0.46
Weight (lbs): 1.01
Fixture Finish: SSR / BKV / CWI / CRY / HAB / LAG / UFT / ITA / RUA / RUR / MIC / FTG / MYG / TWT / LOD / PUS / FRO / FUP / KIA / POP / BLS / SPG / MEY / GOH / GUM / CHC / COM / ABZ / JAG / OBR / MOS / ROR
Fixture Material: Aluminum Die Cast
Cut-out Measurements: 98mm / 3 7/8"

ELECTRICAL

Lamp Type: LED (Zhaga Standard)
Input Wattage (W): 16.5
Total Output Wattage (W): 14.7
Dimming: Dali Dimming
Driver Included: No
Driver Location: Recessed Housing
Driver Type: Constant Current - 120Vac
Driver Class: Class 2
Input Voltage (V): 120
Constant Current (MA): 350

LED

Number of LEDs: 1
Color Temperature (°K): Warm Dim
Max. Delivered Lumen (lm): 760
Nominal Lumen (lm): 1140
CRI: >90 CRI

OPTICAL

Reflector°: 20 / 40 / 60
Adjustability: Rotational 355°; Tilt 30°

RATINGS AND CERTIFICATIONS

Certified By: Certified for North American Standards
IP rating: IP20

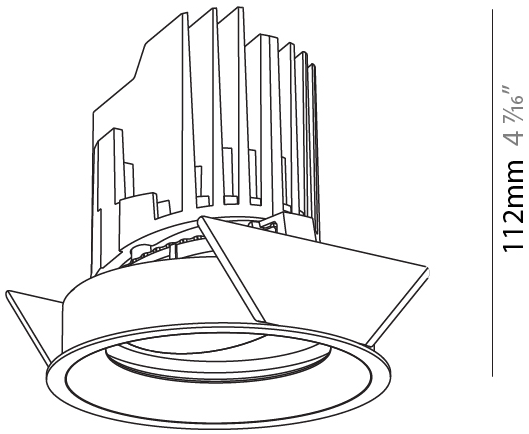

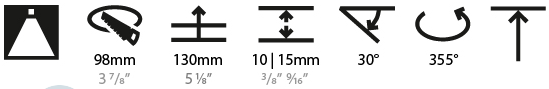

A

Zaneen Group Inc. © 2024, T 1800-388-3382, F 416-247-9319, www.zaneen.com
Available for International specifications by adding 'INT' at the end of the existing Model #. For assistance on 'custom' specifications, contact zteam@zaneen.com.
In a constant effort to supply the best product, we reserve the right to change specifications or materials without notice. The most recent specification sheets are found at zaneen.com

May 31, 2024, 12:59 am

ZANEEN®

PROJECT	
TYPE	
SPECIFIER	
QUANTITY	
DATE	

BIONIQ ROUND ADJUSTABLE RECESSED

A35542-

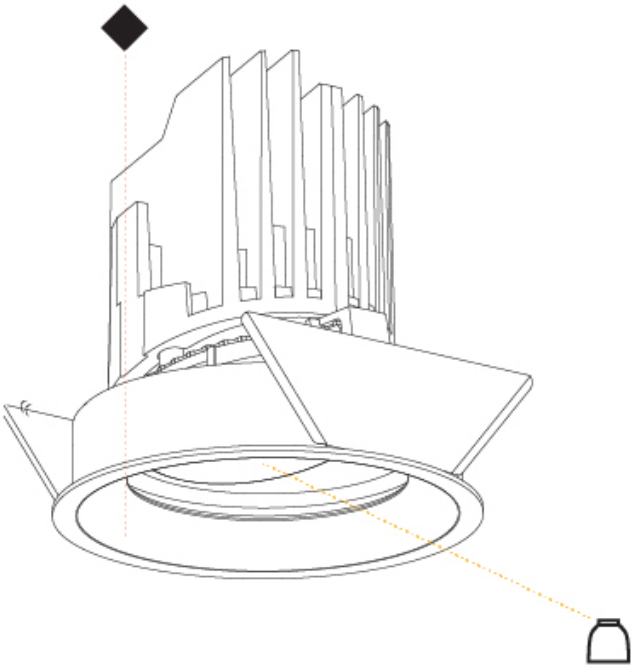

A

Zaneen Group Inc. © 2024, T 1800-388-3382, F 416-247-9319, www.zaneen.com

Available for International specifications by adding 'INT' at the end of the existing Model #. For assistance on 'custom' specifications, contact zteam@zaneen.com.
In a constant effort to supply the best product, we reserve the right to change specifications or materials without notice. The most recent specification sheets are found at zaneen.com

ZANEEN®

PROJECT	
TYPE	
SPECIFIER	
QUANTITY	
DATE	

BIONIQ ROUND DEEP RECESSED

A35544- _____ - _____

base number | Finishes (Diamond) | Reflector Options

1.To build a product code in our configurator select the specify button on the base model # product page
2. To build a manual product code on this datasheet choose from the options listed below in blue font and add the suffix to the base model #

GENERAL

Series: Bioniq
Subseries: Bioniq Round Deep
Brand: Prolicht
Division: Architectural
Mounting Type: Recessed
Mounting Location: Ceiling
Subcategory: Downlight

PHYSICAL

Shape: Round
Diameter (mm): 107
Diameter (in): 4 3/16
Height (mm): 130
Height (in): 5 1/8
Ceiling Thickness (mm): 10 / 12.5 / 15
Ceiling Thickness (in): 3/8 or 1/2 or 9/16
Min. Recessing Depth (mm): 150
Min. Recessing Depth (in): 5 7/8
Light Distribution: Downlight
Weight (kg): 0.506
Weight (lbs): 1.12
Fixture Finish: SSR / BKV / CWI / CRY / HAB / LAG / UFT / ITA / RUA / RUR / MIC / FTG / MYG / TWT / LOD / PUS / FRO / FUP / KIA / POP / BLS / SPG / MEY / GOH / GUM / CHC / COM / ABZ / JAG / OBR / MOS / ROR
Fixture Material: Aluminum Die Cast
Cut-out Measurements: 98mm / 3 7/8"

ELECTRICAL

Lamp Type: LED (Zhaga Standard)
Total Output Wattage (W): 15
Dimming: Dali Dimming
Driver Included: No
Driver Location: Recessed Housing
Driver Type: Constant Current - 120Vac
Housing: See components
Input Voltage (V): 120
Constant Current (MA): 350

LED

Number of LEDs: 1
Color Temperature (°K): Warm Dim
Max. Delivered Lumen (lm): 760
Nominal Lumen (lm): 1140
CRI: >90 CRI

OPTICAL

Reflector°: 20 / 40 / 60

RATINGS AND CERTIFICATIONS

Certified By: Certified for North American Standards
IP rating: IP20

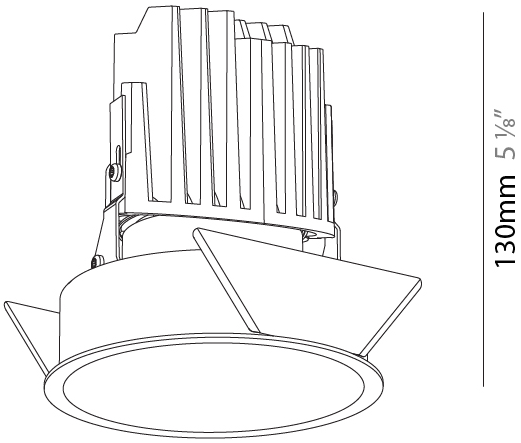

Ø 95mm 3 3/4"

Ø 107mm 4 3/16"

A

Zaneen Group Inc. © 2024, T 1800-388-3382, F 416-247-9319, www.zaneen.com

Available for International specifications by adding 'INT' at the end of the existing Model #. For assistance on 'custom' specifications, contact zteam@zaneen.com.
In a constant effort to supply the best product, we reserve the right to change specifications or materials without notice. The most recent specification sheets are found at zaneen.com

ZANEEN®

PROJECT	
TYPE	
SPECIFIER	
QUANTITY	
DATE	

BIONIQ ROUND DEEP RECESSED

A35544-

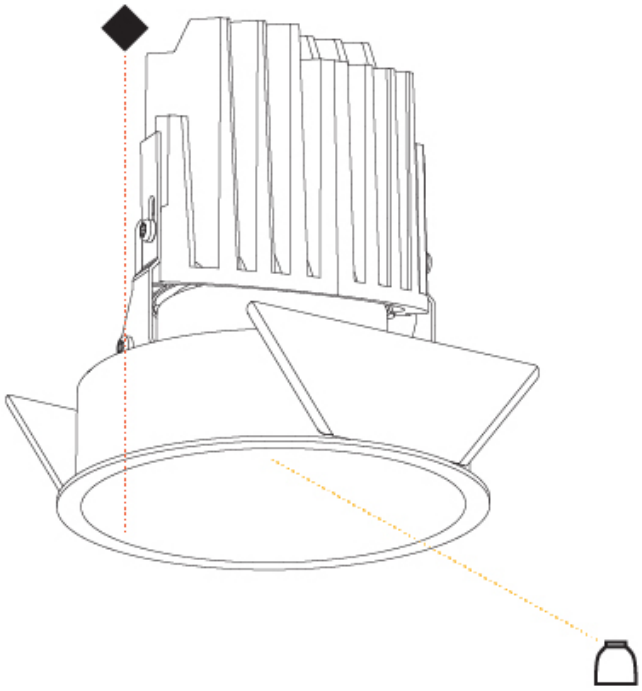

A

Zaneen Group Inc. © 2024, T 1800-388-3382, F 416-247-9319, www.zaneen.com

Available for International specifications by adding 'INT' at the end of the existing Model #. For assistance on 'custom' specifications, contact zteam@zaneen.com.
In a constant effort to supply the best product, we reserve the right to change specifications or materials without notice. The most recent specification sheets are found at zaneen.com

ZANEEN®

BIONIQ ROUND PINHOLE RECESSED

PROJECT	
TYPE	
SPECIFIER	
QUANTITY	
DATE	

A35545- _____ - _____

base number | Finishes (Diamond) | Reflector Options

1.To build a product code in our configurator select the specify button on the base model # product page
2. To build a manual product code on this datasheet choose from the options listed below in blue font and add the suffix to the base model #

GENERAL

Series: Bioniq
Subseries: Bioniq Round Pinhole
Brand: Prolicht
Division: Architectural
Mounting Type: Recessed
Mounting Location: Ceiling
Subcategory: Downlight

PHYSICAL

Shape: Round
Diameter (mm): 107
Diameter (in): 4 3/16
Height (mm): 112
Height (in): 4 7/16
Ceiling Thickness (mm): 10 / 12.5 / 15
Ceiling Thickness (in): 3/8 or 1/2 or 9/16
Min. Recessing Depth (mm): 130
Min. Recessing Depth (in): 5 1/8
Light Distribution: Adjustable / Downlight
Weight (kg): 0.456
Weight (lbs): 1
Fixture Finish: SSR / BKV / CWI / CRY / HAB / LAG / UFT / ITA / RUA / RUR / MIC / FTG / MYG / TWT / LOD / PUS / FRO / FUP / KIA / POP / BLS / SPG / MEY / GOH / GUM / CHC / COM / ABZ / JAG / OBR / MOS / ROR
Fixture Material: Aluminum Die Cast
Cut-out Measurements: 98mm / 3 7/8"

ELECTRICAL

Lamp Type: LED (Zhaga Standard)
Total Output Wattage (W): 15
Dimming: Dali Dimming
Driver Included: No
Driver Location: Recessed Housing
Driver Type: Constant Current - 120Vac
Housing: See components
Input Voltage (V): 120
Constant Current (MA): 350

LED

Number of LEDs: 1
Color Temperature (°K): Warm Dim
Max. Delivered Lumen (lm): 760
Nominal Lumen (lm): 1140
CRI: >90 CRI
Lamp Life (hrs): 50000

OPTICAL

Reflector°: 20 / 40 / 60
Adjustability: Rotational 355°; Tilt 30°

RATINGS AND CERTIFICATIONS

Certified By: Certified for North American Standards
IP rating: IP20

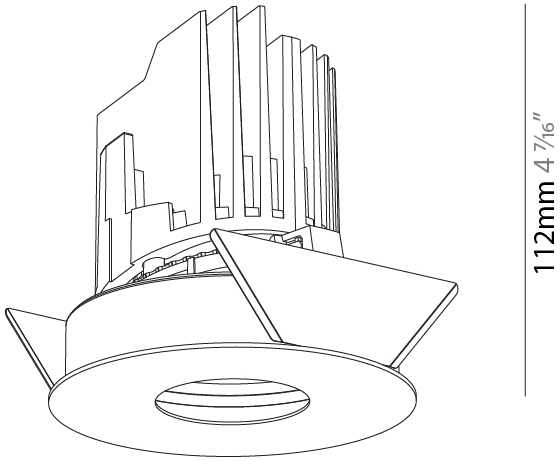

A

Zaneen Group Inc. © 2024, T 1800-388-3382, F 416-247-9319, www.zaneen.com

Available for International specifications by adding 'INT' at the end of the existing Model #. For assistance on 'custom' specifications, contact zteam@zaneen.com.
In a constant effort to supply the best product, we reserve the right to change specifications or materials without notice. The most recent specification sheets are found at zaneen.com

ZANEEN®

PROJECT	
TYPE	
SPECIFIER	
QUANTITY	
DATE	

BIONIQ ROUND PINHOLE RECESSED

A35545-

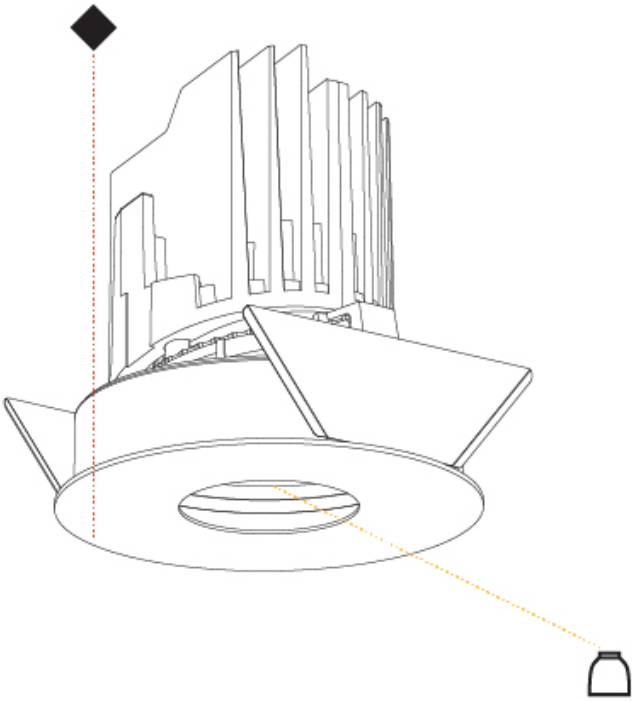

A

Zaneen Group Inc. © 2024, T 1800-388-3382, F 416-247-9319, www.zaneen.com

Available for International specifications by adding 'INT' at the end of the existing Model #. For assistance on 'custom' specifications, contact zteam@zaneen.com.
In a constant effort to supply the best product, we reserve the right to change specifications or materials without notice. The most recent specification sheets are found at zaneen.com

ZANEEN®

PROJECT	
TYPE	
SPECIFIER	
QUANTITY	
DATE	

BIONIQ ROUND SEMI ADJUSTABLE RECESSED

A35546- _____ - _____

base number | Finishes (Diamond) | Reflector Options

1.To build a product code in our configurator select the specify button on the base model # product page
2. To build a manual product code on this datasheet choose from the options listed below in blue font and add the suffix to the base model #

GENERAL

Series: Bioniq
Subseries: Bioniq Round Semi Adjustable
Brand: Prolicht
Division: Architectural
Mounting Type: Recessed
Mounting Location: Ceiling
Subcategory: Downlight

PHYSICAL

Shape: Round
Diameter (mm): 107
Diameter (in): 4 3/16
Height (mm): 112
Height (in): 4 7/16
Ceiling Thickness (mm): 10 / 12.5 / 15
Ceiling Thickness (in): 3/8 or 1/2 or 9/16
Min. Recessing Depth (mm): 130
Min. Recessing Depth (in): 5 1/8
Light Distribution: Adjustable / Downlight
Weight (kg): 0.435
Weight (lbs): 0.96
Fixture Finish: SSR / BKV / CWI / CRY / HAB / LAG / UFT / ITA / RUA / RUR / MIC / FTG / MYG / TWT / LOD / PUS / FRO / FUP / KIA / POP / BLS / SPG / MEY / GOH / GUM / CHC / COM / ABZ / JAG / OBR / MOS / ROR
Fixture Material: Aluminum Die Cast
Cut-out Measurements: 98mm / 3 7/8"

ELECTRICAL

Lamp Type: LED (Zhaga Standard)
Total Output Wattage (W): 15
Dimming: Dali Dimming
Driver Included: No
Driver Location: Recessed Housing
Driver Type: Constant Current - 120Vac
Housing: See components
Input Voltage (V): 120
Constant Current (MA): 350

LED

Number of LEDs: 1
Color Temperature (°K): Warm Dim
Max. Delivered Lumen (lm): 760
Nominal Lumen (lm): 1140
CRI: >90 CRI
Lamp Life (hrs): 50000

OPTICAL

Reflector°: 20 / 40 / 60
Adjustability: Rotational 355°; Tilt 10°

RATINGS AND CERTIFICATIONS

Certified By: Certified for North American Standards
IP rating: IP20

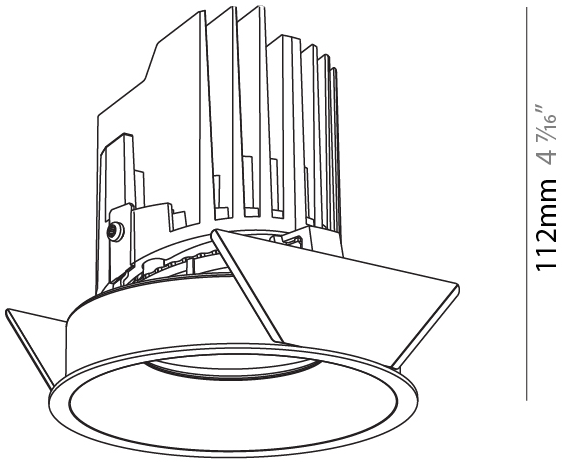

A

Zaneen Group Inc. © 2024, T 1800-388-3382, F 416-247-9319, www.zaneen.com

Available for International specifications by adding 'INT' at the end of the existing Model #. For assistance on 'custom' specifications, contact zteam@zaneen.com.
In a constant effort to supply the best product, we reserve the right to change specifications or materials without notice. The most recent specification sheets are found at zaneen.com

ZANEEN®

PROJECT	
TYPE	
SPECIFIER	
QUANTITY	
DATE	

BIONIQ ROUND SEMI ADJUSTABLE RECESSED

A35546-

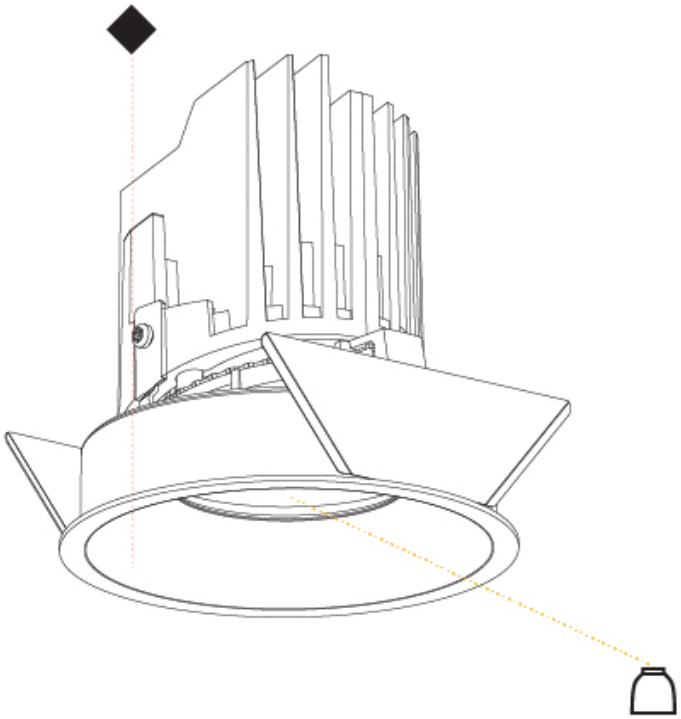

A

Zaneen Group Inc. © 2024, T 1800-388-3382, F 416-247-9319, www.zaneen.com

Available for International specifications by adding 'INT' at the end of the existing Model #. For assistance on 'custom' specifications, contact zteam@zaneen.com.
In a constant effort to supply the best product, we reserve the right to change specifications or materials without notice. The most recent specification sheets are found at zaneen.com

ZANEEN®

PROJECT	
TYPE	
SPECIFIER	
QUANTITY	
DATE	

BIONIQ ROUND WALLWASH RECESSED

A35548- _____ - _____

base number | Finishes (Diamond) | Reflector Options

1.To build a product code in our configurator select the specify button on the base model # product page
2. To build a manual product code on this datasheet choose from the options listed below in blue font and add the suffix to the base model #

GENERAL

Series: Bioniq
Subseries: Bioniq Round Wallwash
Brand: Prolicht
Division: Architectural
Mounting Type: Recessed
Mounting Location: Ceiling
Subcategory: Downlight

PHYSICAL

Shape: Round
Diameter (mm): 107
Diameter (in): 4 3/16
Height (mm): 118
Height (in): 4 5/8
Ceiling Thickness (mm): 10 / 12.5 / 15
Ceiling Thickness (in): 3/8 or 1/2 or 9/16
Min. Recessing Depth (mm): 140
Min. Recessing Depth (in): 5 1/2
Light Distribution: Adjustable / Asymmetric
Weight (kg): 0.456
Weight (lbs): 1
Fixture Finish: SSR / BKV / CWI / CRY / HAB / LAG / UFT / ITA / RUA / RUR / MIC / FTG / MYG / TWT / LOD / PUS / FRO / FUP / KIA / POP / BLS / SPG / MEY / GOH / GUM / CHC / COM / ABZ / JAG / OBR / MOS / ROR
Fixture Material: Aluminum Die Cast
Cut-out Measurements: 98mm / 3 7/8"

ELECTRICAL

Lamp Type: LED (Zhaga Standard)
Total Output Wattage (W): 15
Dimming: Dali Dimming
Driver Included: No
Driver Location: Recessed Housing
Driver Type: Constant Current - 120Vac
Housing: See components
Input Voltage (V): 120
Constant Current (MA): 350

LED

Number of LEDs: 1
Color Temperature (°K): Warm Dim
Max. Delivered Lumen (lm): 850
Nominal Lumen (lm): 1140
CRI: >90 CRI
Lamp Life (hrs): 50000

OPTICAL

Reflector°: 20 / 40 / 60
Adjustability: Fixed

RATINGS AND CERTIFICATIONS

Certified By: Certified for North American Standards
IP rating: IP20

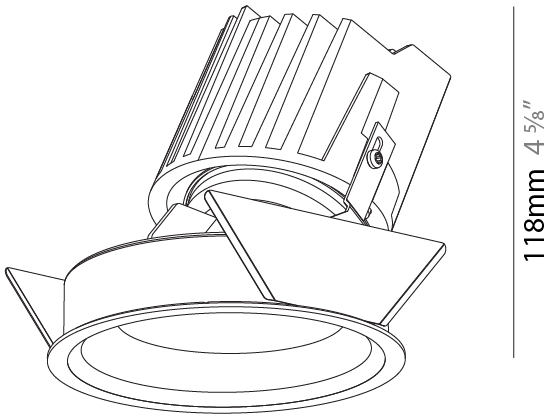

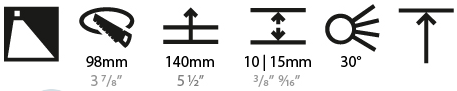

A

Zaneen Group Inc. © 2024, T 1800-388-3382, F 416-247-9319, www.zaneen.com

Available for International specifications by adding 'INT' at the end of the existing Model #. For assistance on 'custom' specifications, contact zteam@zaneen.com.
In a constant effort to supply the best product, we reserve the right to change specifications or materials without notice. The most recent specification sheets are found at zaneen.com

ZANEEN®

PROJECT	
TYPE	
SPECIFIER	
QUANTITY	
DATE	

BIONIQ ROUND WALLWASH RECESSED

A35548-

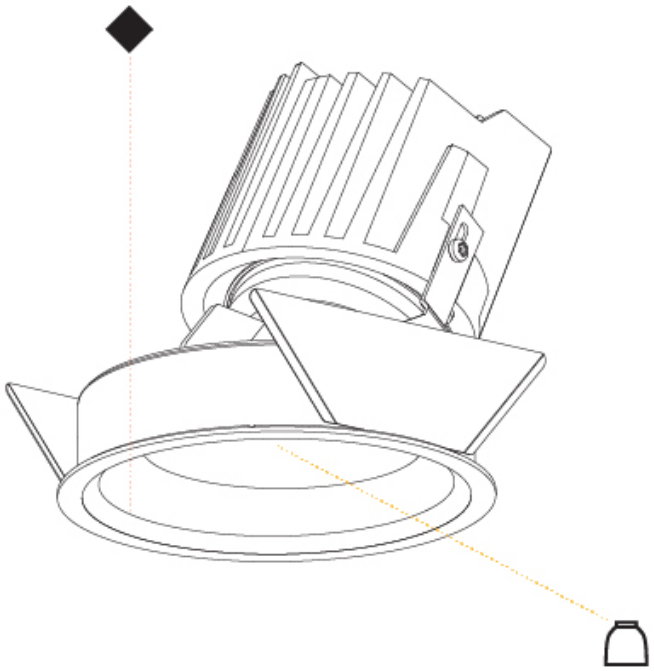

A

Zaneen Group Inc. © 2024, T 1800-388-3382, F 416-247-9319, www.zaneen.com

Available for International specifications by adding 'INT' at the end of the existing Model #. For assistance on 'custom' specifications, contact zteam@zaneen.com.
In a constant effort to supply the best product, we reserve the right to change specifications or materials without notice. The most recent specification sheets are found at zaneen.com

ZANEEN®

PROJECT	
TYPE	
SPECIFIER	
QUANTITY	
DATE	

BIONIQ ROUND WALLWASH RECESSED

A35549-

base number — Reflector Options

1.To build a product code in our configurator select the specify button on the base model # product page
2. To build a manual product code on this datasheet choose from the options listed below in blue font and add the suffix to the base model #

GENERAL

Series: Bioniq
Subseries: Bioniq Round Wallwash
Brand: Prolicht
Division: Architectural
Mounting Type: Recessed
Mounting Location: Ceiling
Subcategory: Downlight

PHYSICAL

Shape: Round
Diameter (mm): 107
Diameter (in): 4 3/16
Height (mm): 118
Height (in): 4 5/8
Ceiling Thickness (mm): 10 / 12.5 / 15
Ceiling Thickness (in): 3/8 or 1/2 or 9/16
Min. Recessing Depth (mm): 140
Min. Recessing Depth (in): 5 1/2
Light Distribution: Adjustable / Asymmetric
Weight (kg): 0.456
Weight (lbs): 1
Fixture Finish: Chrome
Fixture Material: Aluminum Die Cast
Cut-out Measurements: 98mm / 3 7/8"

ELECTRICAL

Lamp Type: LED (Zhaga Standard)
Total Output Wattage (W): 15
Dimming: Dali Dimming
Driver Included: No
Driver Location: Recessed Housing
Driver Type: Constant Current - 120Vac
Housing: See components
Input Voltage (V): 120
Constant Current (MA): 350

LED

Number of LEDs: 1
Color Temperature (°K): Warm Dim
Max. Delivered Lumen (lm): 910
Nominal Lumen (lm): 1140
CRI: >90 CRI
Lamp Life (hrs): 50000

OPTICAL

Reflector°: 20 / 40 / 60

RATINGS AND CERTIFICATIONS

Certified By: Certified for North American Standards
IP rating: IP20

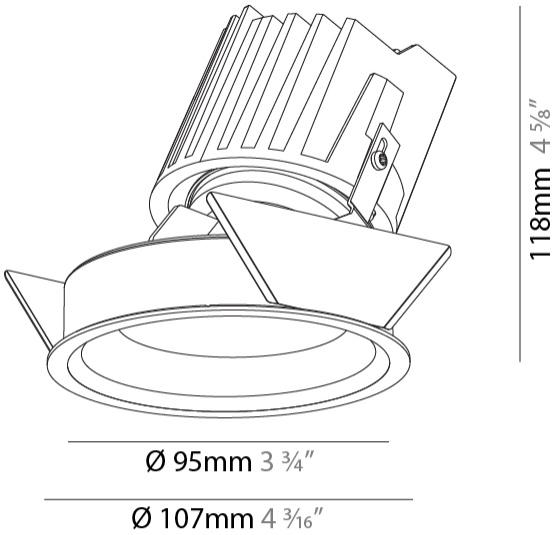

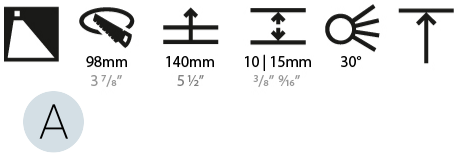

Zaneen Group Inc. © 2024, T 1800-388-3382, F 416-247-9319, www.zaneen.com

Available for International specifications by adding 'INT' at the end of the existing Model #. For assistance on 'custom' specifications, contact zteam@zaneen.com.
In a constant effort to supply the best product, we reserve the right to change specifications or materials without notice. The most recent specification sheets are found at zaneen.com

ZANEEN®

PROJECT	
TYPE	
SPECIFIER	
QUANTITY	
DATE	

BIONIQ ROUND WALLWASH RECESSED

A35549-

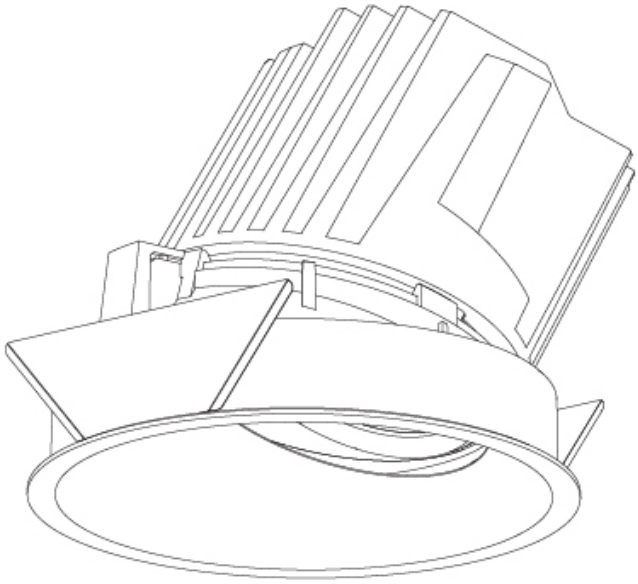

A

Zaneen Group Inc. © 2024, T 1800-388-3382, F 416-247-9319, www.zaneen.com

Available for International specifications by adding 'INT' at the end of the existing Model #. For assistance on 'custom' specifications, contact zteam@zaneen.com.
In a constant effort to supply the best product, we reserve the right to change specifications or materials without notice. The most recent specification sheets are found at zaneen.com

ZANEEN®

PROJECT	
TYPE	
SPECIFIER	
QUANTITY	
DATE	

BIONIQ ROUND PINHOLE RECESSED

A37855- _____ - _____

base number | Color Temperature | Finishes (Diamond)

1.To build a product code in our configurator select the specify button on the base model # product page
2. To build a manual product code on this datasheet choose from the options listed below in blue font and add the suffix to the base model #

GENERAL

Series: Bioniq
Subseries: Bioniq Round Pinhole
Brand: Prolicht
Division: Architectural
Mounting Type: Recessed
Mounting Location: Ceiling
Subcategory: Downlight

PHYSICAL

Shape: Round
Diameter (mm): 139
Diameter (in): 5 1/2
Height (mm): 126
Height (in): 4 15/16
Ceiling Thickness (mm): 10 / 12.5 / 15
Ceiling Thickness (in): 3/8 or 1/2 or 9/16
Min. Recessing Depth (mm): 140
Min. Recessing Depth (in): 5 1/2
Light Distribution: Adjustable / Downlight
Weight (kg): 0.86
Weight (lbs): 1.9
Fixture Finish: SSR / BKV / CWI / CRY / HAB / LAG / UFT / ITA / RUA / RUR / MIC / FTG / MYG / TWT / LOD / PUS / FRO / FUP / KIA / POP / BLS / SPG / MEY / GOH / GUM / CHC / COM / ABZ / JAG / OBR / MOS / ROR
Fixture Material: Aluminum Die Cast
Cut-out Measurements: 130mm / 5 1/8"

ELECTRICAL

Lamp Type: LED (Zhaga Standard)
Input Wattage (W): 13.2 / 16.5
Total Output Wattage (W): 12 / 15
Dimming: Tri-Mode (Non-Dimming and Phase Dimming (120Vac only) and 0-10V Dimming)
Driver Included: No
Driver Location: Recessed Housing
Driver Type: Constant Current - Universal
Housing: See components
Input Voltage (V): 120 - 277
Constant Current (MA): 350

LED

Number of LEDs: 1
Color Temperature (°K): 2700 / 3000 / 3500 / 4000
Max. Delivered Lumen (lm): 810 / 900 / 970 / 990
Nominal Lumen (lm): 960 / 1070 / 1156 / 1180
CRI: >90 CRI
Lamp Life (hrs): 50000

OPTICAL

Reflector°: 10
Adjustability: Rotational 355°; Tilt 30°

RATINGS AND CERTIFICATIONS

Certified By: Certified for North American Standards
IP rating: IP20

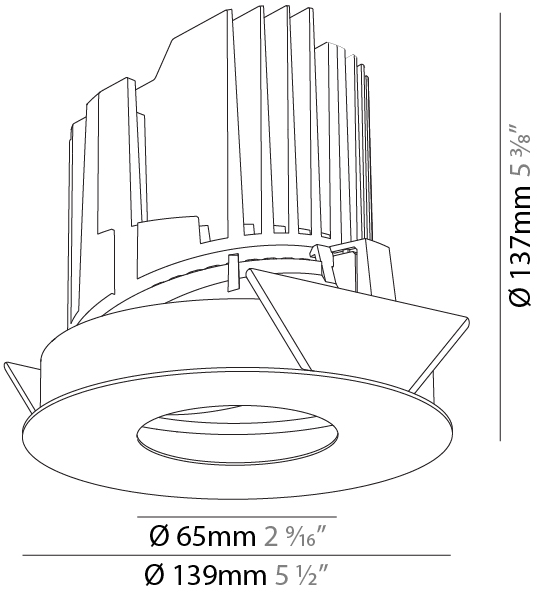

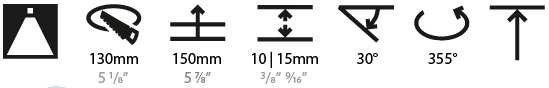

A

Zaneen Group Inc. © 2024, T 1800-388-3382, F 416-247-9319, www.zaneen.com
Available for International specifications by adding 'INT' at the end of the existing Model #. For assistance on 'custom' specifications, contact zteam@zaneen.com.
In a constant effort to supply the best product, we reserve the right to change specifications or materials without notice. The most recent specification sheets are found at zaneen.com

ZANEEN®

PROJECT	
TYPE	
SPECIFIER	
QUANTITY	
DATE	

BIONIQ ROUND PINHOLE RECESSED

A37855-

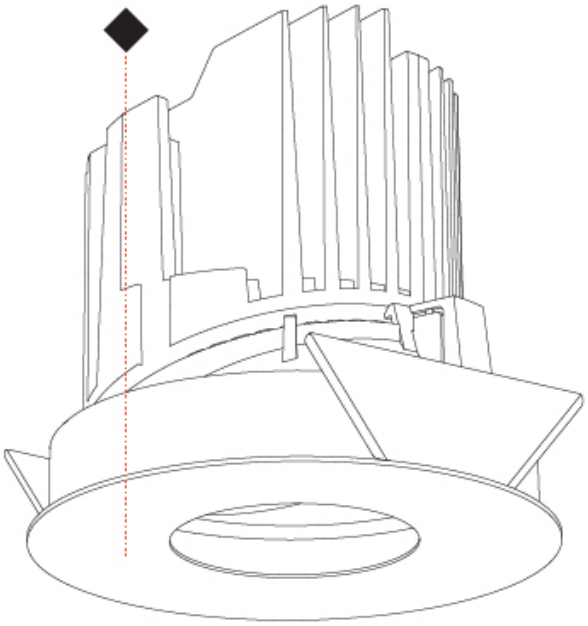

A

Zaneen Group Inc. © 2024, T 1800-388-3382, F 416-247-9319, www.zaneen.com

Available for International specifications by adding 'INT' at the end of the existing Model #. For assistance on 'custom' specifications, contact zteam@zaneen.com.
In a constant effort to supply the best product, we reserve the right to change specifications or materials without notice. The most recent specification sheets are found at zaneen.com

ZANEEN®

PROJECT	
TYPE	
SPECIFIER	
QUANTITY	
DATE	

BIONIQ ROUND PINHOLE RECESSED

A37861- _____ - _____

base number | Color Temperature | Finishes (Diamond)

1.To build a product code in our configurator select the specify button on the base model # product page
2. To build a manual product code on this datasheet choose from the options listed below in blue font and add the suffix to the base model #

GENERAL

Series: Bioniq
Subseries: Bioniq Round Pinhole
Brand: Prolicht
Division: Architectural
Mounting Type: Recessed
Mounting Location: Ceiling
Subcategory: Downlight

PHYSICAL

Shape: Round
Diameter (mm): 107
Diameter (in): 4 3/16
Height (mm): 112
Height (in): 4 7/16
Ceiling Thickness (mm): 10 / 12.5 / 15
Ceiling Thickness (in): 3/8 or 1/2 or 9/16
Min. Recessing Depth (mm): 130
Min. Recessing Depth (in): 5 1/8
Light Distribution: Adjustable / Downlight
Weight (kg): 0.473
Weight (lbs): 1.04
Fixture Finish: SSR / BKV / CWI / CRY / HAB / LAG / UFT / ITA / RUA / RUR / MIC / FTG / MYG / TWT / LOD / PUS / FRO / FUP / KIA / POP / BLS / SPG / MEY / GOH / GUM / CHC / COM / ABZ / JAG / OBR / MOS / ROR
Fixture Material: Aluminum Die Cast
Cut-out Measurements: 98mm / 3 7/8"

ELECTRICAL

Lamp Type: LED
Input Wattage (W): 13.2 / 16.5
Total Output Wattage (W): 12 / 15
Dimming: Tri-Mode (Non-Dimming and Phase Dimming (120Vac only) and 0-10V Dimming)
Driver Included: No
Driver Location: Recessed Housing
Driver Type: Constant Current - Universal
Housing: See components
Input Voltage (V): 120 - 277
Constant Current (MA): 350

LED

Number of LEDs: 1
Color Temperature (°K): 2700 / 3000 / 3500 / 4000
Max. Delivered Lumen (lm): 850 / 950 / 1019 / 1040
Nominal Lumen (lm): 960 / 1070 / 1156 / 1180
CRI: >90 CRI
Lamp Life (hrs): 50000

OPTICAL

Reflector°: 10
Adjustability: Rotational 355°; Tilt 30°

RATINGS AND CERTIFICATIONS

Certified By: Certified for North American Standards
IP rating: IP20

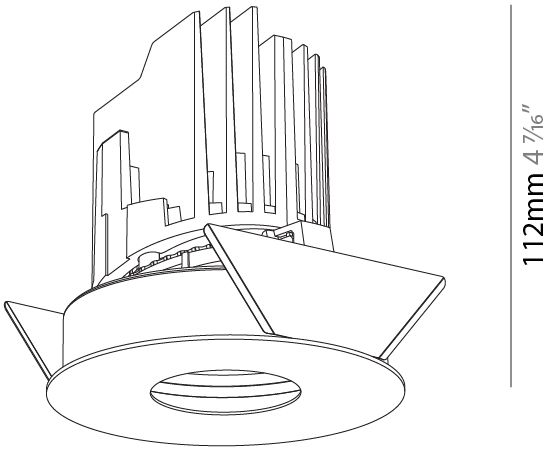

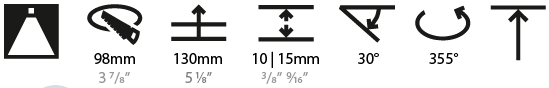

A

Zaneen Group Inc. © 2024, T 1800-388-3382, F 416-247-9319, www.zaneen.com
Available for International specifications by adding 'INT' at the end of the existing Model #. For assistance on 'custom' specifications, contact zteam@zaneen.com.
In a constant effort to supply the best product, we reserve the right to change specifications or materials without notice. The most recent specification sheets are found at zaneen.com

ZANEEN®

PROJECT	
TYPE	
SPECIFIER	
QUANTITY	
DATE	

BIONIQ ROUND PINHOLE RECESSED

A37861-

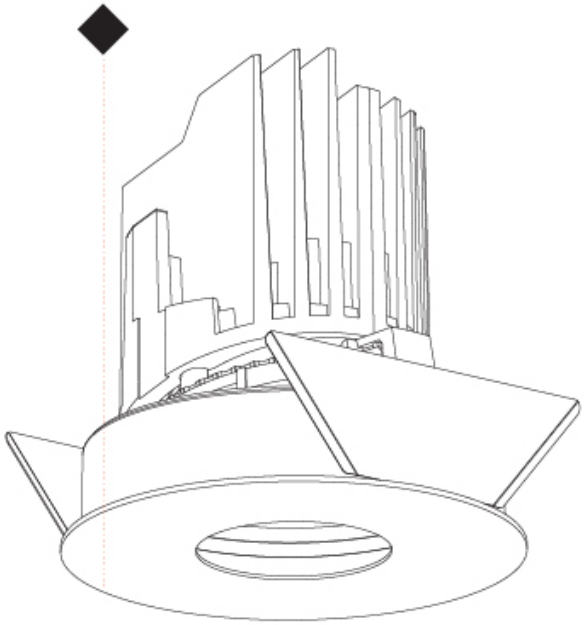

A

Zaneen Group Inc. © 2024, T 1800-388-3382, F 416-247-9319, www.zaneen.com

Available for International specifications by adding 'INT' at the end of the existing Model #. For assistance on 'custom' specifications, contact zteam@zaneen.com.
In a constant effort to supply the best product, we reserve the right to change specifications or materials without notice. The most recent specification sheets are found at zaneen.com

ZANEEN®

BIONIQ ROUND PINHOLE RECESSED

PROJECT	
TYPE	
SPECIFIER	
QUANTITY	
DATE	

A37864- _____ - _____ - _____

base number | Color Temperature | Finishes (Diamond) | Reflector Options

1.To build a product code in our configurator select the specify button on the base model # product page
2. To build a manual product code on this datasheet choose from the options listed below in blue font and add the suffix to the base model #

GENERAL

Series: Bioniq
Subseries: Bioniq Round Pinhole
Brand: Prolicht
Division: Architectural
Mounting Type: Recessed
Mounting Location: Ceiling
Subcategory: Downlight

PHYSICAL

Shape: Round
Diameter (mm): 107
Diameter (in): 4 3/16
Height (mm): 112
Height (in): 4 7/16
Ceiling Thickness (mm): 10 / 12.5 / 15
Ceiling Thickness (in): 3/8 or 1/2 or 9/16
Min. Recessing Depth (mm): 130
Min. Recessing Depth (in): 5 1/8
Light Distribution: Adjustable / Downlight
Weight (kg): 0.47
Weight (lbs): 1.04
Fixture Finish: SSR / BKV / CWI / CRY / HAB / LAG / UFT / ITA / RUA / RUR / MIC / FTG / MYG / TWT / LOD / PUS / FRO / FUP / KIA / POP / BLS / SPG / MEY / GOH / GUM / CHC / COM / ABZ / JAG / OBR / MOS / ROR
Fixture Material: Aluminum Die Cast
Cut-out Measurements: 98mm / 3 7/8"

ELECTRICAL

Lamp Type: LED (Zhaga Standard)
Input Wattage (W): 15.5
Total Output Wattage (W): 14
Driver Included: No
Driver Location: Recessed Housing
Constant Current (MA): 350

LED

Number of LEDs: 1
Color Temperature (°K): 2700 / 3000 / 3500 / 4000
Max. Delivered Lumen (lm): 930 / 960 / 1009 / 1030
Nominal Lumen (lm): 1386 / 1438 / 1511 / 1542
CRI: >90 CRI

OPTICAL

Reflector°: 20 / 40 / 60
Adjustability: Rotational 355°; Tilt 30°

RATINGS AND CERTIFICATIONS

Certified By: Certified for North American Standards
IP rating: IP20

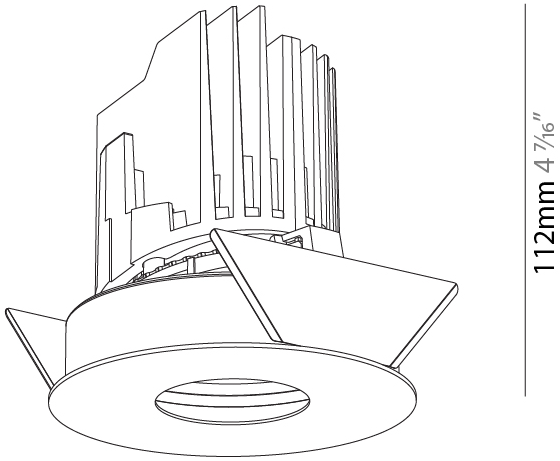

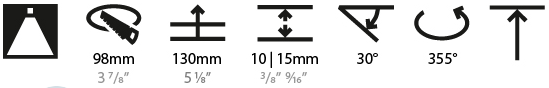

A

Zaneen Group Inc. © 2024, T 1800-388-3382, F 416-247-9319, www.zaneen.com

Available for International specifications by adding 'INT' at the end of the existing Model #. For assistance on 'custom' specifications, contact zteam@zaneen.com.
In a constant effort to supply the best product, we reserve the right to change specifications or materials without notice. The most recent specification sheets are found at zaneen.com

May 31, 2024, 12:59 am

ZANEEN®

PROJECT	
TYPE	
SPECIFIER	
QUANTITY	
DATE	

BIONIQ ROUND PINHOLE RECESSED

A37864-

For Color / Finish Chart & Symbology see Appendix or product page downloadable area.

01-29

°K

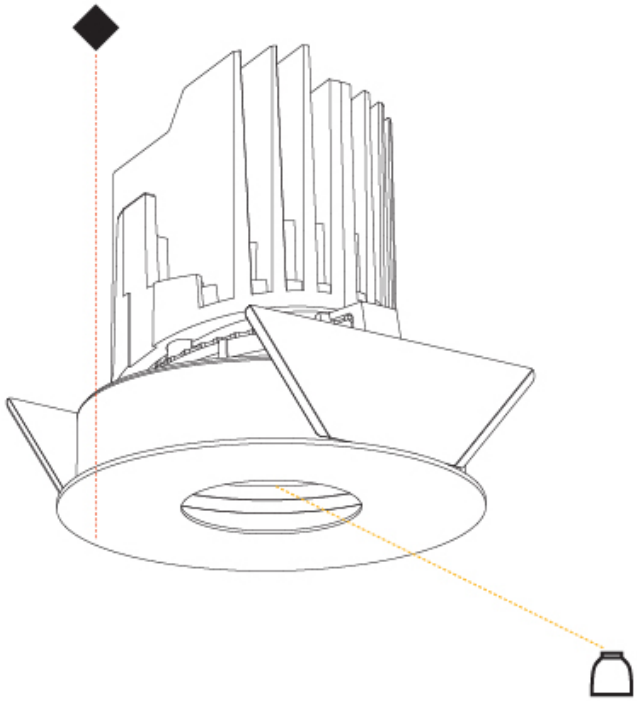

Color Temperature	27K	35K	30K	40K	°K
	2700K	3500K	3000K	4000K	

Reflector	20	40	60
	20°	40°	60°

ORDER-EXAMPLE: ◆ °K

L3XXXX- 02 30K 20

Black 3000K 20°

A

Zaneen Group Inc. © 2024, T 1800-388-3382, F 416-247-9319, www.zaneen.com

Available for International specifications by adding 'INT' at the end of the existing Model #. For assistance on 'custom' specifications, contact zteam@zaneen.com.
In a constant effort to supply the best product, we reserve the right to change specifications or materials without notice. The most recent specification sheets are found at zaneen.com

ZANEEN®

BIONIQ

COLOR FINISH CHART

PROJECT	
TYPE	
SPECIFIER	
QUANTITY	
DATE	

Fixture Finish

Sparkling Silver - 01 (SSR)

Black Velvet - 02 (BKV)

Crystal White - 03 (CWI)

Creamy - 04 (CRY)

Hampton Bay - 05 (HAB)

Lagoon - 06 (LAG)

Urban Forest - 07 (UFT)

In the Army - 08 (ITA)

Rusty Angel - 09 (RUA)

Rusty Rush - 10 (RUR)

Milk and Chocolate - 11 (MIC)

Fade to Gray - 12 (FTG)

Mysterious Gray - 13 (MYG)

Twilight - 14 (TWT)

Lost Dream - 15 (LOD)

Purple Sky - 16 (PUS)

Fresh Oh - 17 (FRO)

Funky P. - 18 (FUP)

Kissing Aphrodite - 19 (KIA)

Poseidon's Paradise - 20 (POP)

Blue Sky - 21 (BLS)

Spring Green - 22 (SPG)

Mellow Yellow - 23 (MEY)

Golden Heart - 24 (GOH)

Gun Metal - 25 (GUM)

Champagne Cream - 26 (CHC)

Copper Mine - 27 (COM)

Ancient Bronze - 28 (ABZ)

Jazz Gold - 29 (JAG)

Olive Breeze - 30 (OBR)

Moonlight Silver - 31 (MOS)

Rosewood Red - 32 (ROR)

Digital: Not all screens are calibrated the same, and therefore, colors will appear differently betwee
Physical: When texture is involved, there will be variations in color, character and tone within a pro and between product families.

Gun Metal: No Gun Metal finish is alike. It combines a mixture of transparent and black color partic nsures a highly individual effect and no luminaire being identical.
Champagne Cream, Copper Mine, Ancient Bronze + Jazz Gold: These finishes have slight fading from specific powder coating production. Each luminaire will slightly vary.

Zaneen Group Inc. © 2024, T 1800 388 3382, F 416-247-9319, www.zaneen.com

Available for International specifications by adding 'INT' at the end of the existing Model #. For assistance on 'custom' specifications, contact zteam@zaneen.com.
In a constant effort to supply the best product, we reserve the right to change specifications or materials without notice. The most recent specification sheets are found at zaneen.com

ZANEEN®

BIONIQ

PROJECT	
TYPE	
SPECIFIER	
QUANTITY	
DATE	

LEGEND

	floor-mounted		pivotable		special LED (upon request) RGB, RGBW, tunable, gold+, meat+, art+, fashion+
	wall and ceiling: recessed and surface mounted		rotating		warm dim / natural dimming LED
	ceiling-mounted and wall-mounted		illuminate tilted		rechargeable battery powered
	wall-mounted		color of suspension cable		fixture with natural vivid LED (upon request)
	omni-directional light distribution		length of suspension cable	CRI	color rendering index
	direct light distribution		reflector degree selection	°K	color temperature
	direct/indirect light distribution		super spot	LM	lumen (luminous flux)
	indirect light distribution		lens	LM/W	efficacy (lumens per watt)
	asymmetric light distribution		lens pack	UGR	Unified Glare Rating (UGR) range from 5-40
	aura light distribution		shine ring	316	marine grade (AISI 316 stainless steel)
	round wall or ceiling cut-out		integrated shine ring with diffuser		walk on
	square wall or ceiling cut-out		free individual colors 01-29		drive on
	the supplied jig specifies the cutout dimensions		individual colors: 00 (free of charge), 01-25 (extra charge)	DSC	Dark Sky Compliance
	minimum distance (meters) lamp - object		luminaire part to be colored (F1)		Americans with Disabilities Act (less than 4" off the wall located between 27"-84" from floor)
	recessed depth		luminaire part to be colored (F2)		lamp protected against explosion
	ceiling thickness in mm		luminaire part to be colored (F3)		blown glass using traditional methods by master glass blower
	ceiling thickness selection		luminaire part to be colored (F4)		acoustic material
	dimmable DP (phase), DV (0-10V), DD (dali), DS (step-dim)		luminaire part to be colored (F5)		protection class I, protection insulation
	included or excluded LED driver/transformer/ control gear		color of 3-circuit adaptor		protection class II, protection insulation
	separately switchable		indirect diffuser		ETL Certified to UL and CSA Standards
	sensor	D	direct diffuser		UL Certified to UL and CSA Standards
	remote control		ball-proof (upon request)		CSA Certified to UL and CSA Standards
	available upon request		accessory		Certified for North American Standards

IP RATING

IP20	protected against ingress of solid bodies greater than 12.5mm (finger)
IP33	protected against ingress of solid bodies greater than 2.5mm protected against sprays of water up to 60 degrees from the vertical (rain)
IP40	protected against ingress of solid bodies greater than 1mm (wire) no protection against the ingress of moisture
IP43	protected against ingress of solid bodies greater than 1mm (wire) protected against sprays of water up to 60 degrees from the vertical (rain)
IP44	protected against ingress of solid bodies greater than 1mm (wire) protected against water splashed from all directions
IP54	protected against limited ingress of dust (wet rooms/covered outdoor areas) protected against water splashed from all directions
IP65	protected against ingress of dust protected against jets of water
IP66	protected against ingress of dust protected against powerful jets of water or heavy seas
IP67	protected against ingress of dust protected against immersion of water between 15cm - 1m for 30 minutes
IP68	protected against ingress of dust protected against immersion of water under pressure for long periods

IK RATING

IK01	protected against 0.14 joules impact (equivalent to 0.25kg mass dropped from 56mm above the surface)
IK02	protected against 0.2 joules impact (equivalent to 0.25kg mass dropped from 80mm above the surface)
IK03	protected against 0.35 joules impact (equivalent to 0.25kg mass dropped from 140mm above the surface)
IK04	protected against 0.5 joules impact (equivalent to 0.25kg mass dropped from 200mm above the surface)
IK05	protected against 0.7 joules impact (equivalent to 0.25kg mass dropped from 280mm above the surface)
IK06	protected against 1 joules impact (equivalent to 0.25kg mass dropped from 400mm above the surface)
IK07	protected against 2 joules impact (equivalent to 0.5kg mass dropped from 400mm above the surface)
IK08	protected against 5 joules impact (equivalent to 1.7kg mass dropped from 300mm above the surface)
IK09	protected against 10 joules impact (equivalent to 5.0kg mass dropped from 200mm above the surface)
IK10	protected against 20 joules impact (equivalent to 5.0kg mass dropped from 400mm above the surface)