ZANEEN®

PROJECT	
TYPE	
SPECIFIER	
QUANTITY	
DATE	

BUCHI VERTICAL SUSPENSION

D131594-

base number — Finish Options

1.To build a product code in our configurator select the specify button on the base model # product page
2. To build a manual product code on this datasheet choose from the options listed below in blue font and add the suffix to the base model #

GENERAL

Series: Buchi
Subseries: Buchi Vertical
Partner: Knikerboker
Division: Design
Installation: Suspension
Product Type: Pendant
Mounting Location: Ceiling
Light Distribution: Direct

PHYSICAL

Shape: Abstract
Length (mm): 113
Length (in): 4 7/16
Width (mm): 110
Width (in): 4 5/16
Height (mm): 165
Height (in): 6 1/2
Max. Overall Height (mm): 2165
Max. Overall Height (in): 85 1/4
Fixture Finish: EWH / EBK / MAN / COF / PRD / SLF / GLF / CLF / BRL
Fixture Material: Metal
Cable Details: 2000mm / 78 3/4" Cable

ELECTRICAL

Lamp Type: LED Retrofit
Input Wattage (W): 5
Bulb Included: Bulb Not Included
Lamp Base: E26
Dimming: Phase Dimming (120Vac Only)
Input Voltage (V): 120Vac Direct Line

LED

CRI: >80 CRI

OPTICAL

RATINGS AND CERTIFICATIONS

Certified By: Certified for North American Standards
IP rating: IP20

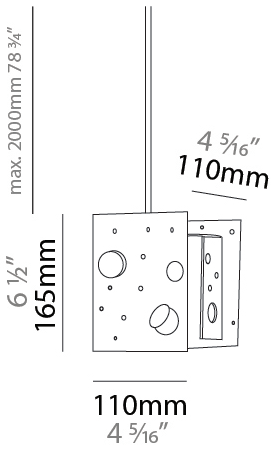

D

Zaneen Group Inc. © 2026, T 1800-388-3382, F 416-247-9319, www.zaneen.com

Available for International specifications by adding 'INT' at the end of the existing Model #. For assistance on 'custom' specifications, contact zteam@zaneen.com.
In a constant effort to supply the best product, we reserve the right to change specifications or materials without notice. The most recent specification sheets are found at zaneen.com

ZANEEN®

PROJECT	
TYPE	
SPECIFIER	
QUANTITY	
DATE	

BUCHI VERTICAL SUSPENSION

D131594-

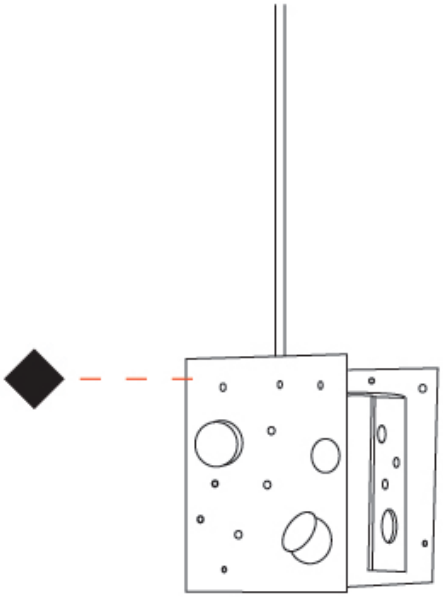

D

Zaneen Group Inc. © 2026, T 1800-388-3382, F 416-247-9319, www.zaneen.com

Available for International specifications by adding 'INT' at the end of the existing Model #. For assistance on 'custom' specifications, contact zteam@zaneen.com.
In a constant effort to supply the best product, we reserve the right to change specifications or materials without notice. The most recent specification sheets are found at zaneen.com

ZANEEN®

PROJECT	
TYPE	
SPECIFIER	
QUANTITY	
DATE	

BUCHI VERTICAL SUSPENSION

D131595-

base number — Finish Options

1.To build a product code in our configurator select the specify button on the base model # product page
2. To build a manual product code on this datasheet choose from the options listed below in blue font and add the suffix to the base model #

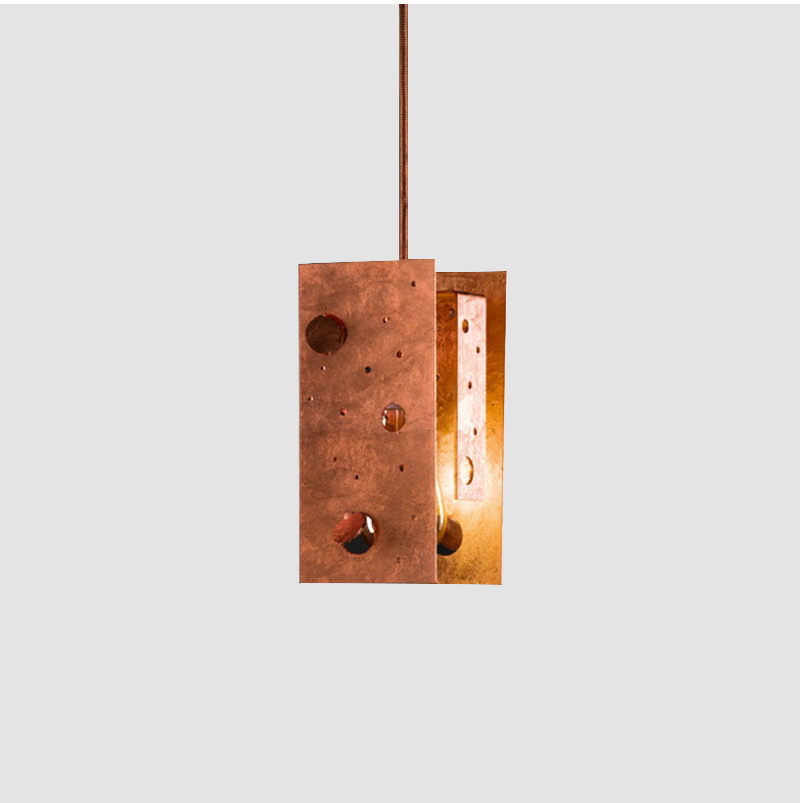

GENERAL

Series: Buchi
Subseries: Buchi Vertical
Partner: Knikerboker
Division: Design
Installation: Suspension
Product Type: Pendant
Mounting Location: Ceiling
Light Distribution: Direct

PHYSICAL

Shape: Abstract
Length (mm): 110
Length (in): 4 5/16
Width (mm): 110
Width (in): 4 5/16
Height (mm): 230
Height (in): 9 1/16
Max. Overall Height (mm): 2230
Max. Overall Height (in): 87 13/16
Fixture Finish: EWH / EBK / MAN / COF / PRD / SLF / GLF / CLF / BRL
Fixture Material: Metal
Cable Details: 2000mm / 78 3/4" Cable

ELECTRICAL

Lamp Type: LED Retrofit
Input Wattage (W): 5
Bulb Included: Bulb Not Included
Lamp Base: E26
Dimming: Non-Dimming / Phase Dimming (120vac Only)
Input Voltage (V): 120Vac Direct Line

LED

CRI: >80 CRI

OPTICAL

RATINGS AND CERTIFICATIONS

Certified By: Certified for North American Standards
IP rating: IP20

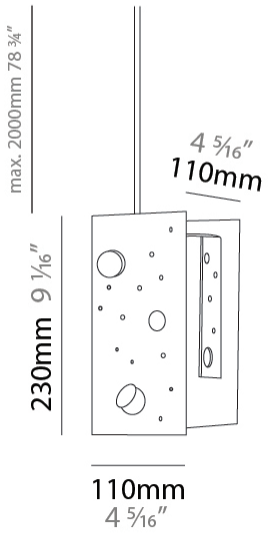

D

Zaneen Group Inc. © 2026, T 1800-388-3382, F 416-247-9319, www.zaneen.com
Available for International specifications by adding 'INT' at the end of the existing Model #. For assistance on 'custom' specifications, contact zteam@zaneen.com.
In a constant effort to supply the best product, we reserve the right to change specifications or materials without notice. The most recent specification sheets are found at zaneen.com

ZANEEN®

PROJECT	
TYPE	
SPECIFIER	
QUANTITY	
DATE	

BUCHI VERTICAL SUSPENSION

D131595-

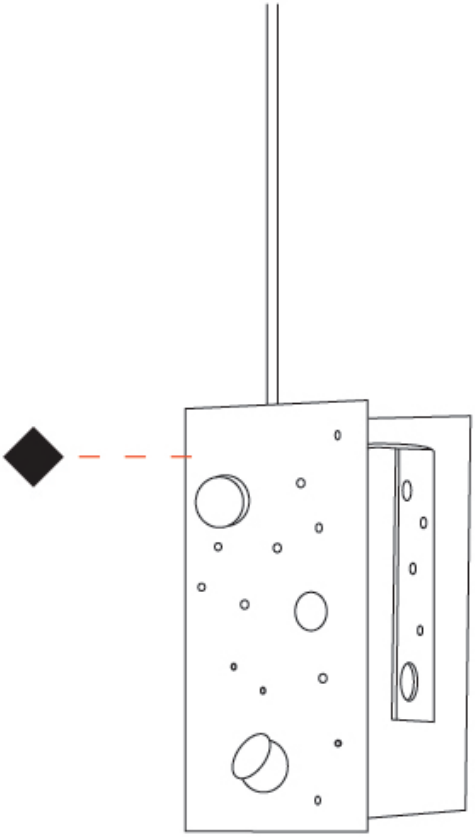

D

Zaneen Group Inc. © 2026, T 1800-388-3382, F 416-247-9319, www.zaneen.com

Available for International specifications by adding 'INT' at the end of the existing Model #. For assistance on 'custom' specifications, contact zteam@zaneen.com.
In a constant effort to supply the best product, we reserve the right to change specifications or materials without notice. The most recent specification sheets are found at zaneen.com

ZANEEN®

PROJECT	
TYPE	
SPECIFIER	
QUANTITY	
DATE	

BUCHI VERTICAL SUSPENSION

D131596-

base number — Finish Options

1.To build a product code in our configurator select the specify button on the base model # product page
2. To build a manual product code on this datasheet choose from the options listed below in blue font and add the suffix to the base model #

GENERAL

Series: Buchi
Subseries: Buchi Vertical
Partner: Knikerboker
Division: Design
Installation: Suspension
Product Type: Pendant
Mounting Location: Ceiling
Light Distribution: Direct

PHYSICAL

Shape: Abstract
Length (mm): 190
Length (in): 7 1/2
Width (mm): 190
Width (in): 7 1/2
Height (mm): 400
Height (in): 15 3/4
Max. Overall Height (mm): 2400
Max. Overall Height (in): 94 1/2
Fixture Finish: EWH / EBK / MAN / COF / PRD / SLF / GLF / CLF / BRL
Fixture Material: Metal
Cable Details: 2000mm / 78 3/4" Cable

ELECTRICAL

Lamp Type: LED Retrofit
Input Wattage (W): 5
Bulb Included: Bulb Not Included
Lamp Base: E26
Dimming: Non-Dimming / Phase Dimming (120vac Only)
Input Voltage (V): 120Vac Direct Line

LED

CRI: >80 CRI

OPTICAL

RATINGS AND CERTIFICATIONS

Certified By: Certified for North American Standards
IP rating: IP20

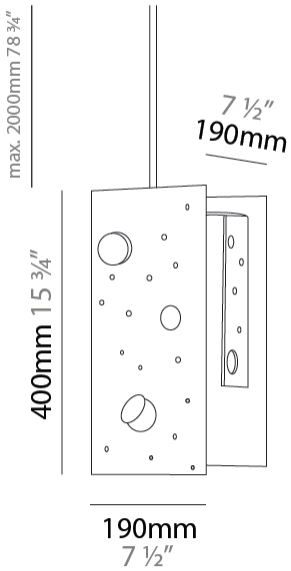

D

Zaneen Group Inc. © 2026, T 1800-388-3382, F 416-247-9319, www.zaneen.com

Available for International specifications by adding 'INT' at the end of the existing Model #. For assistance on 'custom' specifications, contact zteam@zaneen.com.
In a constant effort to supply the best product, we reserve the right to change specifications or materials without notice. The most recent specification sheets are found at zaneen.com

ZANEEN®

PROJECT	
TYPE	
SPECIFIER	
QUANTITY	
DATE	

BUCHI VERTICAL SUSPENSION

D131596-

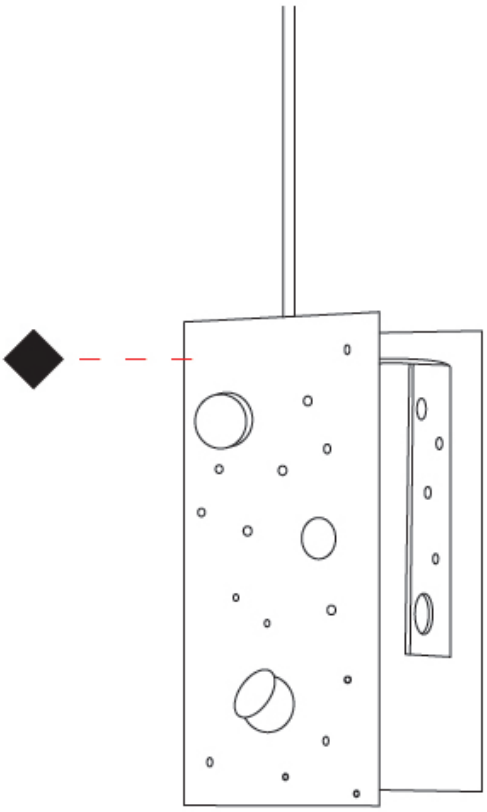

D

Zaneen Group Inc. © 2026, T 1800-388-3382, F 416-247-9319, www.zaneen.com

Available for International specifications by adding 'INT' at the end of the existing Model #. For assistance on 'custom' specifications, contact zteam@zaneen.com.
In a constant effort to supply the best product, we reserve the right to change specifications or materials without notice. The most recent specification sheets are found at zaneen.com

ZANEEN®

PROJECT	
TYPE	
SPECIFIER	
QUANTITY	
DATE	

BUCHI VERTICAL SUSPENSION

D131597-

base number — Finish Options

1.To build a product code in our configurator select the specify button on the base model # product page
2. To build a manual product code on this datasheet choose from the options listed below in blue font and add the suffix to the base model #

GENERAL

Series: Buchi
Subseries: Buchi Vertical
Partner: Knikerboker
Division: Design
Installation: Suspension
Product Type: Pendant
Mounting Location: Ceiling
Light Distribution: Direct

PHYSICAL

Shape: Abstract
Length (mm): 800
Length (in): 31 1/2
Width (mm): 800
Width (in): 31 1/2
Height (mm): 2000
Height (in): 78 3/4
Fixture Finish: EWH / EBK / MAN / COF / PRD / SLF / GLF / CLF / BRL
Fixture Material: Metal
Cable Details: 2000mm / 78 3/4" Cable

ELECTRICAL

Lamp Type: LED Retrofit
Bulb Included: Bulb Not Included
Total Output Wattage (W): 50
Max. Wattage Per Lamp (W): 7
Lamp Base: E26
Dimming: Non-Dimming / Phase Dimming (120vac Only)
Input Voltage (V): 120Vac Direct Line

LED

CRI: >80 CRI

OPTICAL

RATINGS AND CERTIFICATIONS

Certified By: Certified for North American Standards
IP rating: IP20

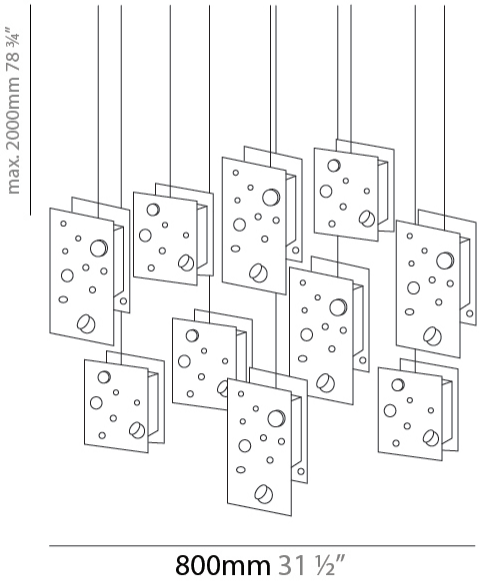

D

Zaneen Group Inc. © 2026, T 1800-388-3382, F 416-247-9319, www.zaneen.com
Available for International specifications by adding 'INT' at the end of the existing Model #. For assistance on 'custom' specifications, contact zteam@zaneen.com.
In a constant effort to supply the best product, we reserve the right to change specifications or materials without notice. The most recent specification sheets are found at zaneen.com

ZANEEN®

PROJECT	
TYPE	
SPECIFIER	
QUANTITY	
DATE	

BUCHI VERTICAL SUSPENSION

D131597-

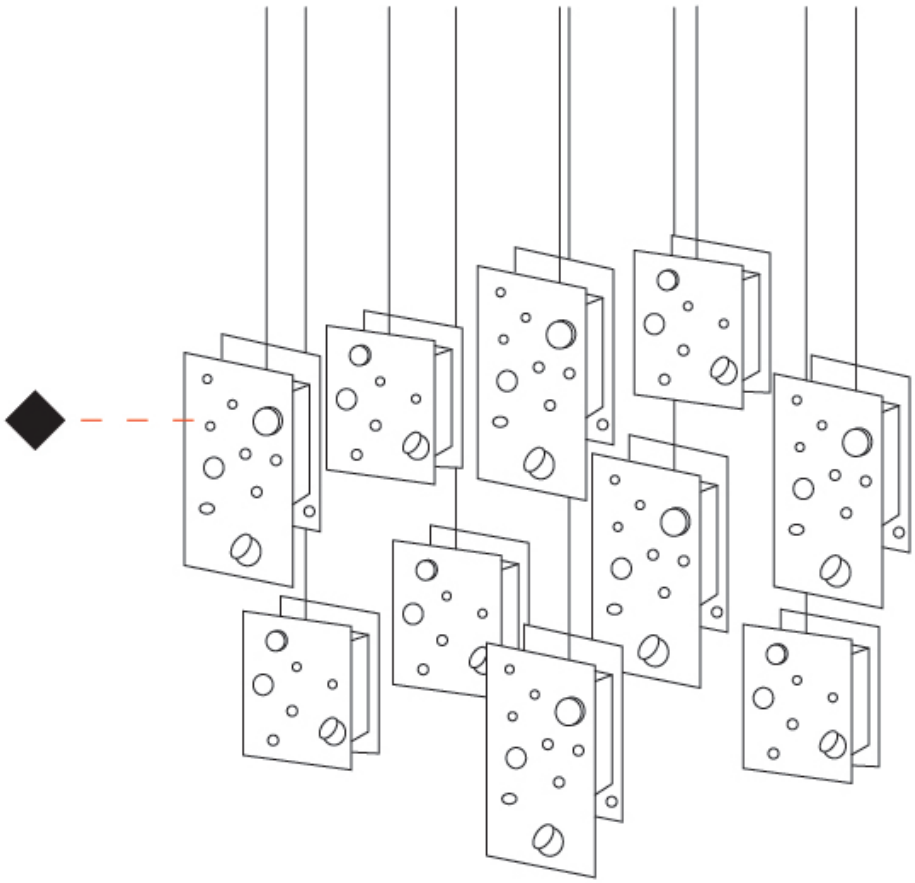

D

Zaneen Group Inc. © 2026, T 1800-388-3382, F 416-247-9319, www.zaneen.com

Available for International specifications by adding 'INT' at the end of the existing Model #. For assistance on 'custom' specifications, contact zteam@zaneen.com.
In a constant effort to supply the best product, we reserve the right to change specifications or materials without notice. The most recent specification sheets are found at zaneen.com

ZANEEN®

PROJECT	
TYPE	
SPECIFIER	
QUANTITY	
DATE	

BUCHI HORIZONTAL SUSPENSION

D131598-

base number — Finish Options

1.To build a product code in our configurator select the specify button on the base model # product page
2. To build a manual product code on this datasheet choose from the options listed below in blue font and add the suffix to the base model #

GENERAL

Series: Buchi
Subseries: Buchi Horizontal
Partner: Knikerboker
Division: Design
Installation: Suspension
Product Type: Pendant
Mounting Location: Ceiling
Light Distribution: Indirect

PHYSICAL

Shape: Abstract
Length (mm): 600
Length (in): 23 5/8
Width (mm): 600
Width (in): 23 5/8
Height (mm): 45
Height (in): 1 3/4
Max. Overall Height (mm): 2045
Max. Overall Height (in): 80 1/2
Fixture Finish: EWH / EBK / MAN / COF / PRD / SLF / GLF / CLF / BRL
Fixture Material: Aluminum
Cable Details: 2000mm / 78 3/4" Cable

ELECTRICAL

Lamp Type: LED
Input Wattage (W): 40
Dimming: Non-Dimming / Phase Dimming (120vac Only)
Driver Included: No
Driver Location: Remote
Driver Type: Constant Current - Universal
Driver Class: Class 2
Input Voltage (V): 120 - 277
Constant Current (MA): 500

LED

Color Temperature (°K): 3000
Max. Delivered Lumen (lm): 7800
CRI: >85 CRI
Lamp Life (hrs): 50000

OPTICAL

RATINGS AND CERTIFICATIONS

Certified By: Certified for North American Standards
IP rating: IP20

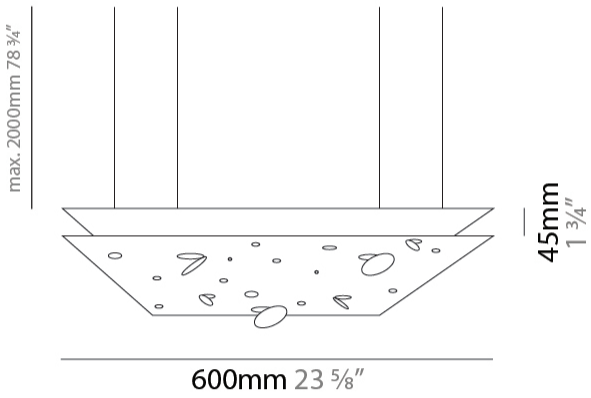

D

Zaneen Group Inc. © 2026, T 1800-388-3382, F 416-247-9319, www.zaneen.com

Available for International specifications by adding 'INT' at the end of the existing Model #. For assistance on 'custom' specifications, contact zteam@zaneen.com.
In a constant effort to supply the best product, we reserve the right to change specifications or materials without notice. The most recent specification sheets are found at zaneen.com

ZANEEN®

PROJECT	
TYPE	
SPECIFIER	
QUANTITY	
DATE	

BUCHI HORIZONTAL SUSPENSION

D131598-

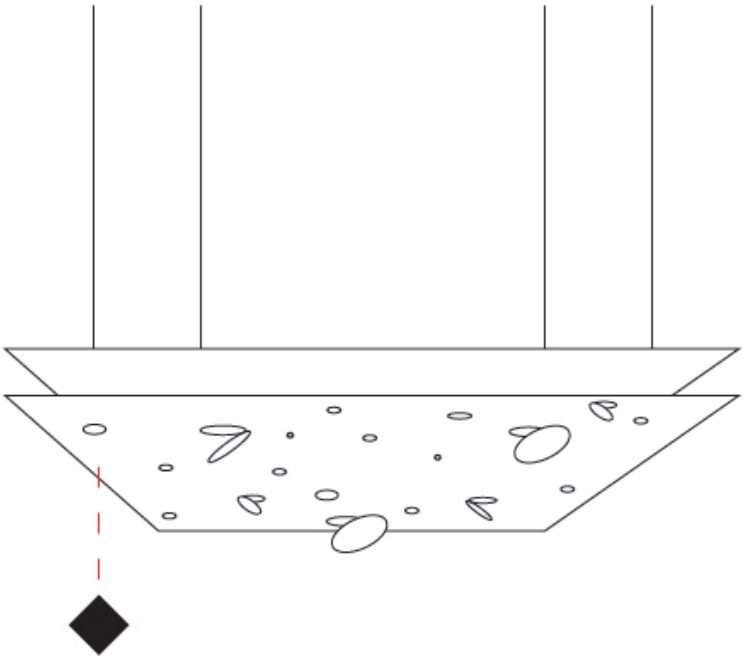

D

Zaneen Group Inc. © 2026, T 1800-388-3382, F 416-247-9319, www.zaneen.com

Available for International specifications by adding 'INT' at the end of the existing Model #. For assistance on 'custom' specifications, contact zteam@zaneen.com.
In a constant effort to supply the best product, we reserve the right to change specifications or materials without notice. The most recent specification sheets are found at zaneen.com

ZANEEN®

BUCHI HORIZONTAL SUSPENSION

PROJECT	
TYPE	
SPECIFIER	
QUANTITY	
DATE	

D131599-

base number — Finish Options

1.To build a product code in our configurator select the specify button on the base model # product page
2. To build a manual product code on this datasheet choose from the options listed below in blue font and add the suffix to the base model #

GENERAL

Series: Buchi
Subseries: Buchi Horizontal
Partner: Knikerboker
Division: Design
Installation: Suspension
Product Type: Pendant
Mounting Location: Ceiling
Light Distribution: Indirect

PHYSICAL

Shape: Abstract
Length (mm): 1000
Length (in): 39 3/8
Width (mm): 400
Width (in): 15 3/4
Height (mm): 45
Height (in): 1 3/4
Max. Overall Height (mm): 2045
Max. Overall Height (in): 80 1/2
Fixture Finish: EWH / EBK / MAN / COF / PRD / SLF / GLF / CLF / BRL
Fixture Material: Aluminum
Cable Details: 2000mm / 78 3/4" Cable

ELECTRICAL

Lamp Type: LED
Input Wattage (W): 40
Dimming: Non-Dimming / Phase Dimming (120vac Only)
Driver Included: No
Driver Location: Remote
Driver Type: Constant Current - Universal
Driver Class: Class 2
Input Voltage (V): 120 - 277
Constant Current (MA): 500

LED

Color Temperature (°K): 3000
Max. Delivered Lumen (lm): 7800
CRI: >85 CRI
Lamp Life (hrs): 50000

OPTICAL

RATINGS AND CERTIFICATIONS

Certified By: Certified for North American Standards
IP rating: IP20

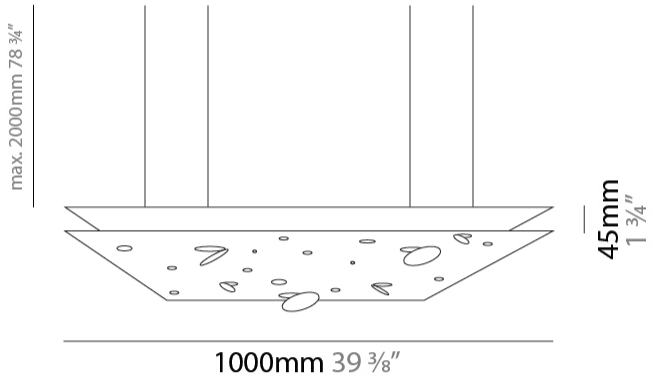

D

Zaneen Group Inc. © 2026, T 1800-388-3382, F 416-247-9319, www.zaneen.com

Available for International specifications by adding 'INT' at the end of the existing Model #. For assistance on 'custom' specifications, contact zteam@zaneen.com.
In a constant effort to supply the best product, we reserve the right to change specifications or materials without notice. The most recent specification sheets are found at zaneen.com

ZANEEN®

PROJECT	
TYPE	
SPECIFIER	
QUANTITY	
DATE	

BUCHI HORIZONTAL SUSPENSION

D131599-

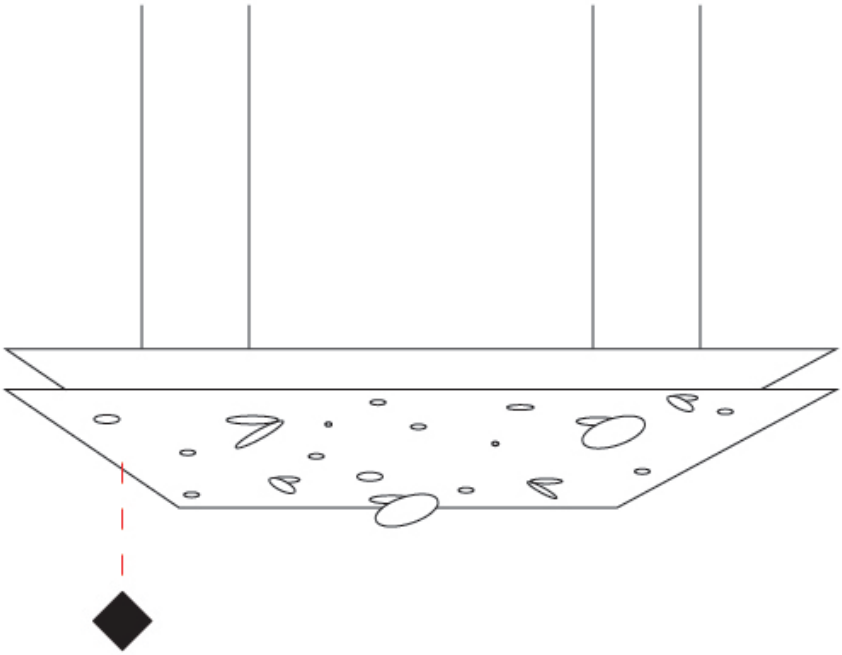

D

Zaneen Group Inc. © 2026, T 1800-388-3382, F 416-247-9319, www.zaneen.com

Available for International specifications by adding 'INT' at the end of the existing Model #. For assistance on 'custom' specifications, contact zteam@zaneen.com.
In a constant effort to supply the best product, we reserve the right to change specifications or materials without notice. The most recent specification sheets are found at zaneen.com

ZANEEN®

PROJECT	
TYPE	
SPECIFIER	
QUANTITY	
DATE	

BUCHI HORIZONTAL SUSPENSION

D131600-

base number — Finish Options

1.To build a product code in our configurator select the specify button on the base model # product page
2. To build a manual product code on this datasheet choose from the options listed below in blue font and add the suffix to the base model #

GENERAL

Series: Buchi
Subseries: Buchi Horizontal
Partner: Knikerboker
Division: Design
Installation: Suspension
Product Type: Pendant
Mounting Location: Ceiling
Light Distribution: Indirect

PHYSICAL

Shape: Abstract
Diameter (mm): 750
Diameter (in): 29 1/3
Height (mm): 45
Height (in): 1 3/4
Max. Overall Height (mm): 2045
Max. Overall Height (in): 80 1/2
Fixture Finish: EWH / EBK / MAN / COF / PRD / SLF / GLF / CLF / BRL
Fixture Material: Aluminum
Cable Details: 2000mm / 78 3/4" Cable

ELECTRICAL

Lamp Type: LED
Input Wattage (W): 40
Dimming: Non-Dimming / Phase Dimming (120vac Only)
Driver Included: No
Driver Location: Remote
Driver Type: Constant Current - Universal
Driver Class: Class 2
Input Voltage (V): 120 - 277
Constant Current (MA): 500

LED

Color Temperature (°K): 3000
Max. Delivered Lumen (lm): 7800
CRI: >85 CRI
Lamp Life (hrs): 50000

OPTICAL

RATINGS AND CERTIFICATIONS

Certified By: Certified for North American Standards
IP rating: IP20

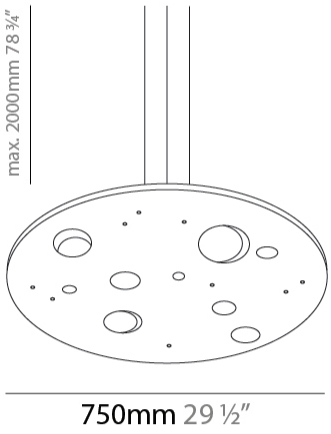

D

Zaneen Group Inc. © 2026, T 1800-388-3382, F 416-247-9319, www.zaneen.com
Available for International specifications by adding 'INT' at the end of the existing Model #. For assistance on 'custom' specifications, contact zteam@zaneen.com.
In a constant effort to supply the best product, we reserve the right to change specifications or materials without notice. The most recent specification sheets are found at zaneen.com

ZANEEN®

PROJECT	
TYPE	
SPECIFIER	
QUANTITY	
DATE	

BUCHI HORIZONTAL SUSPENSION

D131600-

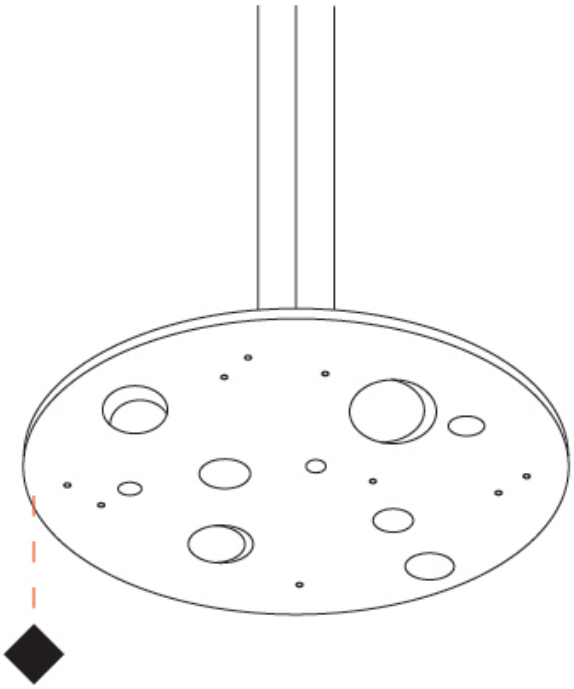

D

Zaneen Group Inc. © 2026, T 1800-388-3382, F 416-247-9319, www.zaneen.com

Available for International specifications by adding 'INT' at the end of the existing Model #. For assistance on 'custom' specifications, contact zteam@zaneen.com.
In a constant effort to supply the best product, we reserve the right to change specifications or materials without notice. The most recent specification sheets are found at zaneen.com

ZANEEN®

PROJECT	
TYPE	
SPECIFIER	
QUANTITY	
DATE	

BUCHI HORIZONTAL SUSPENSION

D131601-

base number — Finish Options

1.To build a product code in our configurator select the specify button on the base model # product page
2. To build a manual product code on this datasheet choose from the options listed below in blue font and add the suffix to the base model #

GENERAL

Series: Buchi
Subseries: Buchi Horizontal
Partner: Knikerboker
Division: Design
Installation: Suspension
Product Type: Pendant
Mounting Location: Ceiling
Light Distribution: Indirect

PHYSICAL

Shape: Abstract
Diameter (mm): 1000
Diameter (in): 39 3/8
Height (mm): 45
Height (in): 1 3/4
Max. Overall Height (mm): 2045
Max. Overall Height (in): 80 1/2
Fixture Finish: EWH / EBK / MAN / COF / PRD / SLF / GLF / CLF / BRL
Fixture Material: Aluminum
Cable Details: 2000mm / 78 3/4" Cable

ELECTRICAL

Lamp Type: LED
Input Wattage (W): 60
Dimming: Non-Dimming / Phase Dimming (120vac Only)
Driver Included: No
Driver Location: Remote
Driver Type: Constant Current - Universal
Driver Class: Class 2
Input Voltage (V): 120 - 277
Constant Current (MA): 500

LED

Color Temperature (°K): 3000
Max. Delivered Lumen (lm): 11700
CRI: >85 CRI
Lamp Life (hrs): 50000

OPTICAL

RATINGS AND CERTIFICATIONS

Certified By: Certified for North American Standards
IP rating: IP20

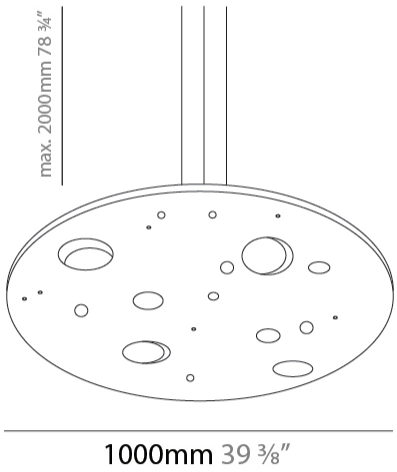

D

Zaneen Group Inc. © 2026, T 1800-388-3382, F 416-247-9319, www.zaneen.com
Available for International specifications by adding 'INT' at the end of the existing Model #. For assistance on 'custom' specifications, contact zteam@zaneen.com.
In a constant effort to supply the best product, we reserve the right to change specifications or materials without notice. The most recent specification sheets are found at zaneen.com

ZANEEN®

PROJECT	
TYPE	
SPECIFIER	
QUANTITY	
DATE	

BUCHI HORIZONTAL SUSPENSION

D131601-

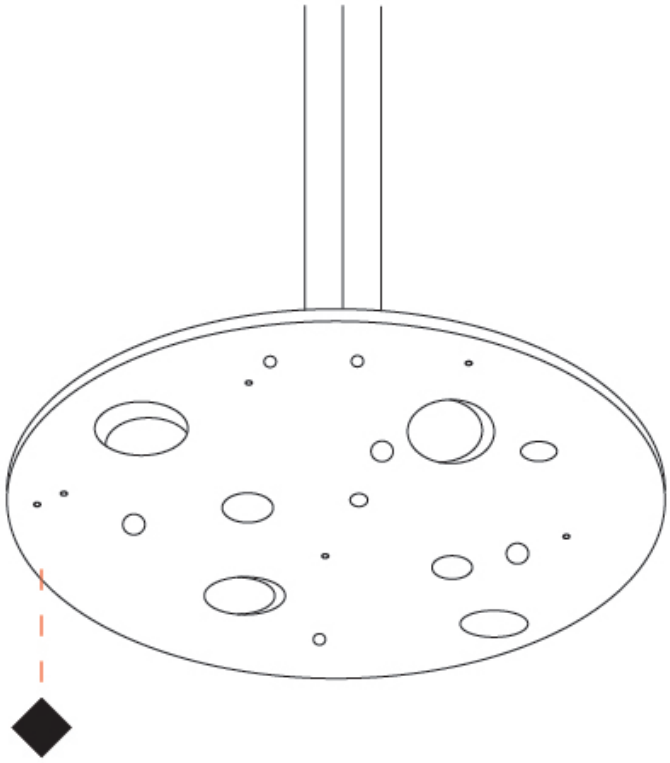

D

Zaneen Group Inc. © 2026, T 1800-388-3382, F 416-247-9319, www.zaneen.com

Available for International specifications by adding 'INT' at the end of the existing Model #. For assistance on 'custom' specifications, contact zteam@zaneen.com.
In a constant effort to supply the best product, we reserve the right to change specifications or materials without notice. The most recent specification sheets are found at zaneen.com

ZANEEN®

PROJECT	
TYPE	
SPECIFIER	
QUANTITY	
DATE	

BUCHI HORIZONTAL SUSPENSION

D131602-

base number — Finish Options

1.To build a product code in our configurator select the specify button on the base model # product page
2. To build a manual product code on this datasheet choose from the options listed below in blue font and add the suffix to the base model #

GENERAL

Series: Buchi
Subseries: Buchi Horizontal
Partner: Knikerboker
Division: Design
Installation: Suspension
Product Type: Pendant
Mounting Location: Ceiling
Light Distribution: Indirect

PHYSICAL

Shape: Abstract
Diameter (mm): 1500
Diameter (in): 59 1/16
Height (mm): 45
Height (in): 1 3/4
Max. Overall Height (mm): 2045
Max. Overall Height (in): 80 1/2
Fixture Finish: EWH / EBK / MAN / COF / PRD / SLF / GLF / CLF / BRL
Fixture Material: Aluminum
Cable Details: 2000mm / 78 3/4" Cable

ELECTRICAL

Lamp Type: LED
Input Wattage (W): 80
Dimming: Non-Dimming / Phase Dimming (120vac Only)
Driver Included: No
Driver Location: Remote
Driver Type: Constant Current - Universal
Driver Class: Class 2
Input Voltage (V): 120 - 277
Constant Current (MA): 500

LED

Color Temperature (°K): 3000
Max. Delivered Lumen (lm): 12050
CRI: >85 CRI
Lamp Life (hrs): 50000

OPTICAL

RATINGS AND CERTIFICATIONS

Certified By: Certified for North American Standards
IP rating: IP20

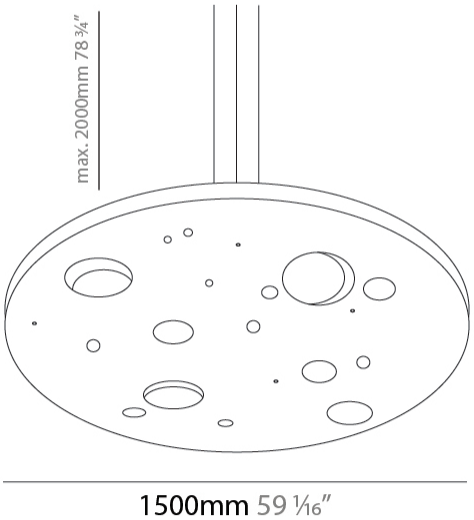

D

Zaneen Group Inc. © 2026, T 1800-388-3382, F 416-247-9319, www.zaneen.com
Available for International specifications by adding 'INT' at the end of the existing Model #. For assistance on 'custom' specifications, contact zteam@zaneen.com.
In a constant effort to supply the best product, we reserve the right to change specifications or materials without notice. The most recent specification sheets are found at zaneen.com

ZANEEN®

PROJECT	
TYPE	
SPECIFIER	
QUANTITY	
DATE	

BUCHI HORIZONTAL SUSPENSION

D131602-

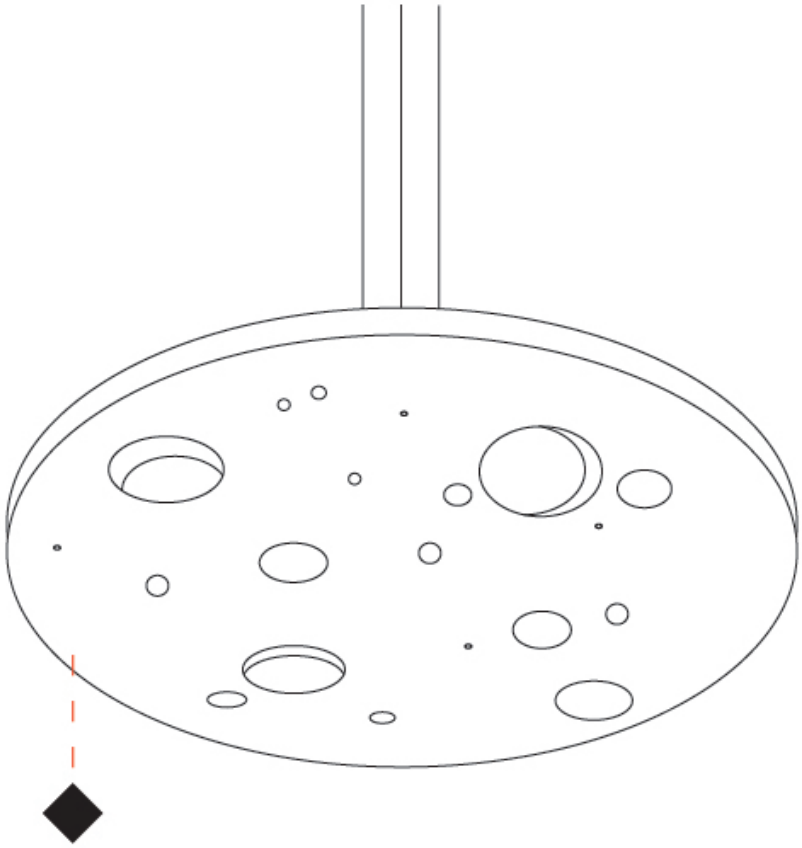

D

Zaneen Group Inc. © 2026, T 1800-388-3382, F 416-247-9319, www.zaneen.com

Available for International specifications by adding 'INT' at the end of the existing Model #. For assistance on 'custom' specifications, contact zteam@zaneen.com.
In a constant effort to supply the best product, we reserve the right to change specifications or materials without notice. The most recent specification sheets are found at zaneen.com

ZANEEN®

BUCHI

COLOR FINISH CHART

PROJECT	
TYPE	
SPECIFIER	
QUANTITY	
DATE	

Fixture Finish

Embossed White - EWH

Embossed Black - EBK

Metallic Anthracite - MAN

Coffee - COF

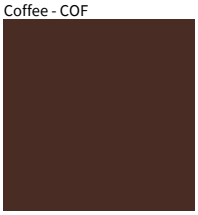

Purple Red - PRD

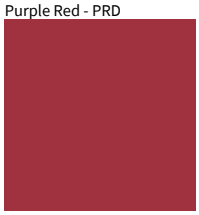

Silver Leaf - SLF

Gold Leaf - GLF

Copper Leaf - CLF

Bronze Leaf - BRL

Digital: Not all screens are calibrated the same, and therefore, colors will appear differently between screens.
Physical: When texture is involved, there will be variations in color, character and tone within a product series and between product families.

D

Zaneen Group Inc. © 2026, T 1800-388-3382, F 416-247-9319, www.zaneen.com

Available for International specifications by adding 'INT' at the end of the existing Model #. For assistance on 'custom' specifications, contact zteam@zaneen.com.
In a constant effort to supply the best product, we reserve the right to change specifications or materials without notice. The most recent specification sheets are found at zaneen.com

ZANEEN®

BUCHI

PROJECT	
TYPE	
SPECIFIER	
QUANTITY	
DATE	

LEGEND

	floor-mounted		pivotable		special LED (upon request) RGB, RGBW, tunable, gold+, meat+, art+, fashion+
	wall and ceiling: recessed and surface mounted		rotating		warm dim / natural dimming LED
	ceiling-mounted and wall-mounted		illuminate tilted		rechargeable battery powered
	wall-mounted		color of suspension cable		fixture with natural vivid LED (upon request)
	omni-directional light distribution		length of suspension cable	CRI	color rendering index
	direct light distribution		reflector degree selection	°K	color temperature
	direct/indirect light distribution		super spot	LM	lumen (luminous flux)
	indirect light distribution		lens	LM/W	efficacy (lumens per watt)
	asymmetric light distribution		lens pack	UGR	Unified Glare Rating (UGR) range from 5-40
	aura light distribution		shine ring	316	marine grade (AISI 316 stainless steel)
	round wall or ceiling cut-out		integrated shine ring with diffuser		walk on
	square wall or ceiling cut-out		free individual colors 01-29		drive on
	the supplied jig specifies the cutout dimensions		individual colors: 00 (free of charge), 01-25 (extra charge)	DSC	Dark Sky Compliance
	minimum distance (meters) lamp - object		luminaire part to be colored (F1)		Americans with Disabilities Act (less than 4" off the wall located between 27"-84" from floor)
	recessed depth		luminaire part to be colored (F2)		lamp protected against explosion
	ceiling thickness in mm		luminaire part to be colored (F3)		blown glass using traditional methods by master glass blower
	ceiling thickness selection		luminaire part to be colored (F4)		acoustic material
	dimmable DP (phase), DV (0-10V), DD (dali), DS (step-dim)		luminaire part to be colored (F5)		protection class I, protection insulation
	included or excluded LED driver/transformer/ control gear		color of 3-circuit adaptor		protection class II, protection insulation
	separately switchable		indirect diffuser		ETL Certified to UL and CSA Standards
	sensor	D	direct diffuser		UL Certified to UL and CSA Standards
	remote control		ball-proof (upon request)		CSA Certified to UL and CSA Standards
	available upon request		accessory		Certified for North American Standards

IP RATING

IP20	protected against ingress of solid bodies greater than 12.5mm (finger)
IP33	protected against ingress of solid bodies greater than 2.5mm protected against sprays of water up to 60 degrees from the vertical (rain)
IP40	protected against ingress of solid bodies greater than 1mm (wire) no protection against the ingress of moisture
IP43	protected against ingress of solid bodies greater than 1mm (wire) protected against sprays of water up to 60 degrees from the vertical (rain)
IP44	protected against ingress of solid bodies greater than 1mm (wire) protected against water splashed from all directions
IP54	protected against limited ingress of dust (wet rooms/covered outdoor areas) protected against water splashed from all directions
IP65	protected against ingress of dust protected against jets of water
IP66	protected against ingress of dust protected against powerful jets of water or heavy seas
IP67	protected against ingress of dust protected against immersion of water between 15cm - 1m for 30 minutes
IP68	protected against ingress of dust protected against immersion of water under pressure for long periods

IK RATING

IK01	protected against 0.14 joules impact (equivalent to 0.25kg mass dropped from 56mm above the surface)
IK02	protected against 0.2 joules impact (equivalent to 0.25kg mass dropped from 80mm above the surface)
IK03	protected against 0.35 joules impact (equivalent to 0.25kg mass dropped from 140mm above the surface)
IK04	protected against 0.5 joules impact (equivalent to 0.25kg mass dropped from 200mm above the surface)
IK05	protected against 0.7 joules impact (equivalent to 0.25kg mass dropped from 280mm above the surface)
IK06	protected against 1 joules impact (equivalent to 0.25kg mass dropped from 400mm above the surface)
IK07	protected against 2 joules impact (equivalent to 0.5kg mass dropped from 400mm above the surface)
IK08	protected against 5 joules impact (equivalent to 1.7kg mass dropped from 300mm above the surface)
IK09	protected against 10 joules impact (equivalent to 5.0kg mass dropped from 200mm above the surface)
IK10	protected against 20 joules impact (equivalent to 5.0kg mass dropped from 400mm above the surface)