ZANEEN®

PROJECT	
TYPE	
SPECIFIER	
QUANTITY	
DATE	

DIXIT RA8 RECESSED

A56057-

base number — Color Temperature

1.To build a product code in our configurator select the specify button on the base model # product page
2. To build a manual product code on this datasheet choose from the options listed below in blue font and add the suffix to the base model #

GENERAL

Series: Dixit
Subseries: Dixit RA8
Brand: Ivela
Division: Architectural
Mounting Type: Recessed
Mounting Location: Ceiling
Subcategory: Downlight

PHYSICAL

Shape: Square
Length (mm): 80
Length (in): 3 1/8
Width (mm): 80
Width (in): 3 1/8
Height (mm): 70
Height (in): 2 3/4
Min. Recessing Depth (mm): 110
Min. Recessing Depth (in): 4 5/16
Light Distribution: Direct
Weight (kg): 0.4
Weight (lbs): 0.88
Diffuser: Clear Polycarbonate
Fixture Finish: MWH
Fixture Material: Aluminum Die Cast
Cut-out Measurements: 70mm / 2 3/4"

ELECTRICAL

Lamp Type: LED
Total Output Wattage (W): 9 / 12
Dimming: Tri-Mode (Non-Dimming and Phase Dimming (120Vac only) and 0-10V Dimming)
Driver Included: No
Driver Location: Recessed Housing
Driver Type: Constant Current - Universal
Driver Class: Class 2
Input Voltage (V): 120 - 277
Constant Current (MA): 250 / 350

LED

Number of LEDs: 1
Color Temperature (°K): 2700 / 3000
Max. Delivered Lumen (lm): 1096 / 1447
CRI: >80 CRI
Efficiency (%): 87.7
Lamp Life (hrs): 50000
Upon Request: 3500K upon request

OPTICAL

Optic°: 26
Adjustability: Fixed
Upon Request: Optic 45° (mirror-metallized) / 65° (white)

RATINGS AND CERTIFICATIONS

Certified By: Certified for North American Standards
IP rating: IP44
IK Rating: IK08
Glare Rating: ≤ 19

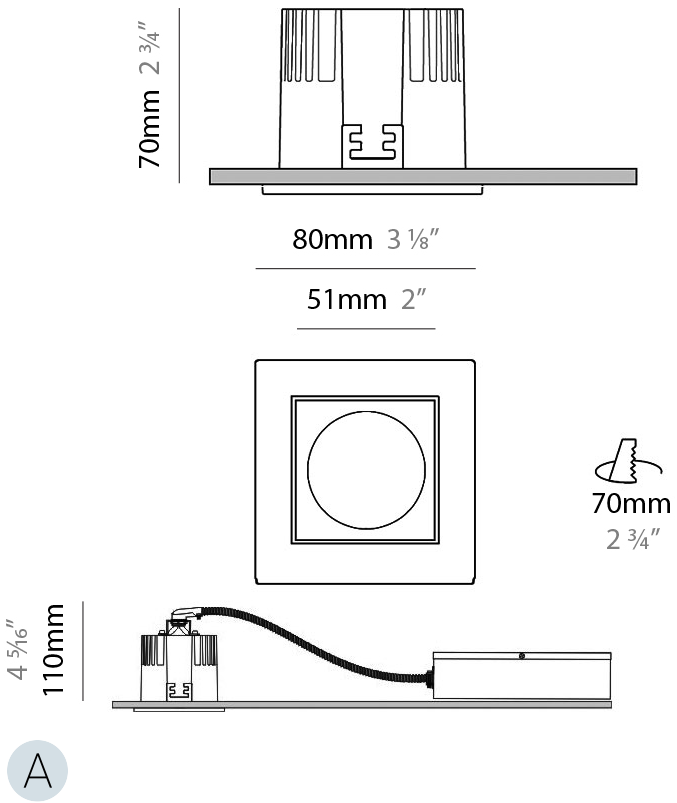

Zaneen Group Inc. © 2024, T 1800-388-3382, F 416-247-9319, www.zaneen.com
Available for International specifications by adding 'INT' at the end of the existing Model #. For assistance on 'custom' specifications, contact zteam@zaneen.com.
In a constant effort to supply the best product, we reserve the right to change specifications or materials without notice. The most recent specification sheets are found at zaneen.com

October 21, 2024, 8:40 am

ZANEEN®

DIXIT RA8 RECESSED

PROJECT	
TYPE	
SPECIFIER	
QUANTITY	
DATE	

A56057-

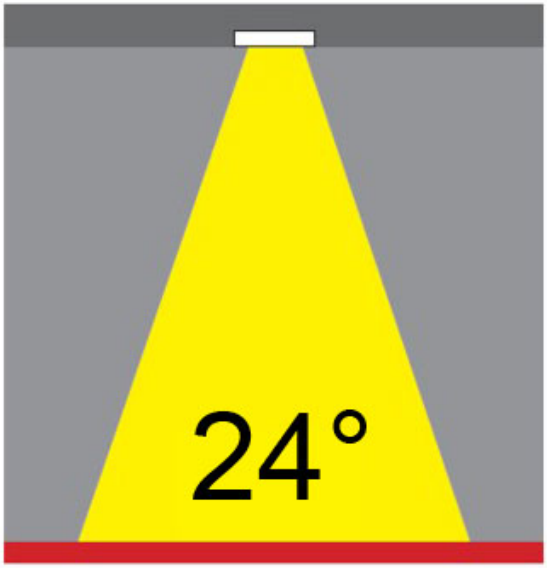

	DP	DV
Dimming	Phase	0-10V

	27K	30K	35K	40K	K°
Color Temperature	2700K	3000K	3500K	4000K	

Order Example K°

L5XXXXXX-DV-30K

0-10V 3000K

A

Zaneen Group Inc. © 2024, T 1800-388-3382, F 416-247-9319, www.zaneen.com

Available for International specifications by adding 'INT' at the end of the existing Model #. For assistance on 'custom' specifications, contact zteam@zaneen.com.
In a constant effort to supply the best product, we reserve the right to change specifications or materials without notice. The most recent specification sheets are found at zaneen.com

ZANEEN®

PROJECT	
TYPE	
SPECIFIER	
QUANTITY	
DATE	

DIXIT RA8 RECESSED

A56061-

base number | Color Temperature

1.To build a product code in our configurator select the specify button on the base model # product page
2. To build a manual product code on this datasheet choose from the options listed below in blue font and add the suffix to the base model #

GENERAL

Series: Dixit
Subseries: Dixit RA8
Brand: Ivela
Division: Architectural
Mounting Type: Recessed
Mounting Location: Ceiling
Subcategory: Downlight

PHYSICAL

Shape: Round
Diameter (mm): 96
Diameter (in): 3 3/4
Height (mm): 85
Height (in): 3 3/8
Min. Recessing Depth (mm): 125
Min. Recessing Depth (in): 4 15/16
Light Distribution: Direct
Weight (kg): 0.3
Weight (lbs): 0.66
Diffuser: Clear Polycarbonate
Fixture Finish: MWH
Fixture Material: Aluminum Die Cast
Cut-out Measurements: 92mm / 3 5/8"

ELECTRICAL

Lamp Type: LED
Total Output Wattage (W): 5.5 / 8.5
Dimming: Tri-Mode (Non-Dimming and Phase Dimming (120Vac only) and 0-10V Dimming)
Driver Included: No
Driver Location: Recessed Housing
Driver Type: Constant Current - Universal
Driver Class: Class 2
Input Voltage (V): 120 - 277
Constant Current (MA): 350 / 500

LED

Number of LEDs: 1
Color Temperature (°K): 2700 / 3000
Max. Delivered Lumen (lm): 501 / 638
CRI: >90 CRI
Efficiency (%): 87.7
Lamp Life (hrs): 50000
Upon Request: 3500K upon request

OPTICAL

Optic°: 26
Beam Angle: Symmetric
Adjustability: Fixed
Upon Request: Optic 45° (mirror-metallized) / 65° (white)

RATINGS AND CERTIFICATIONS

Certified By: Certified for North American Standards
IP rating: IP44
IK Rating: IK08

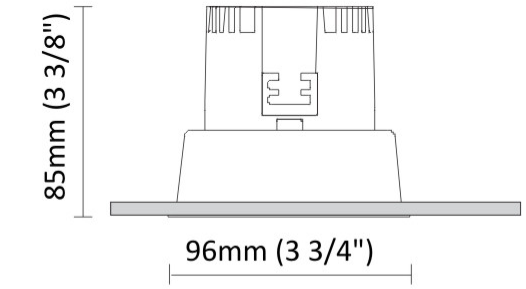

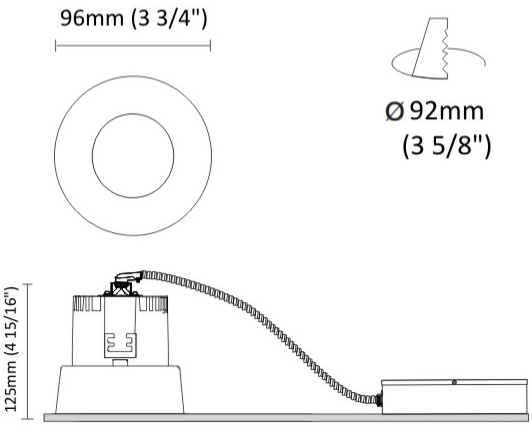

A

Zaneen Group Inc. © 2024, T 1800-388-3382, F 416-247-9319, www.zaneen.com
Available for International specifications by adding 'INT' at the end of the existing Model #. For assistance on 'custom' specifications, contact zteam@zaneen.com.
In a constant effort to supply the best product, we reserve the right to change specifications or materials without notice. The most recent specification sheets are found at zaneen.com

ZANEEN®

PROJECT	
TYPE	
SPECIFIER	
QUANTITY	
DATE	

DIXIT RA8 RECESSED

A56061-

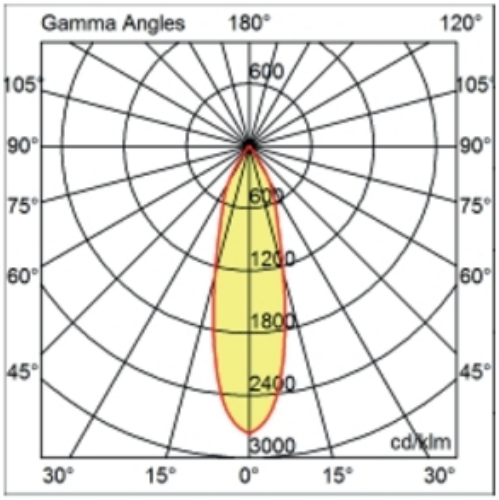

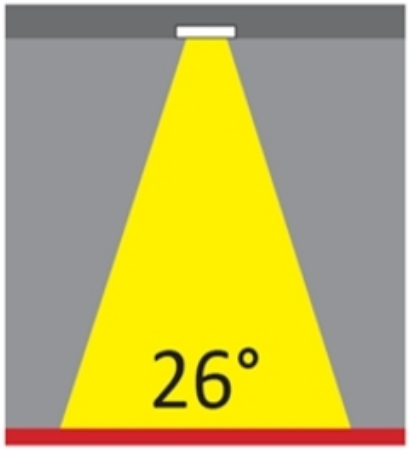

RA 8 TL DIXIT LED 6,5W 550 lm | R:100% | I.Max:2958 Cd/Klm

H[m]	D[m]	Max lux	Med lux	Alpha=26°
1.00	0.47	1508	939	
2.00	0.94	377	235	
3.00	1.41	168	104	
4.00	1.89	94	59	
5.00	2.36	60	38	

H[m]	D[m]	Max lux	Med lux	Beta=26°
1.00	0.47	1508	939	
2.00	0.94	377	235	
3.00	1.41	168	104	
4.00	1.89	94	59	
5.00	2.36	60	38	

Dimming	DP	DV
	Phase	0-10V
Color Temperature	27K 30K 35K	K°
	2700K 3000K 3500K	

Order Example K°

L5XXXXXX-DV-30K

0-10V 3000K

A

Zaneen Group Inc. © 2024, T 1800-388-3382, F 416-247-9319, www.zaneen.com

Available for International specifications by adding 'INT' at the end of the existing Model #. For assistance on 'custom' specifications, contact zteam@zaneen.com.
In a constant effort to supply the best product, we reserve the right to change specifications or materials without notice. The most recent specification sheets are found at zaneen.com

ZANEEN®

PROJECT	
TYPE	
SPECIFIER	
QUANTITY	
DATE	

DIXIT RA8 RECESSED

A56063-

base number | Color Temperature

1.To build a product code in our configurator select the specify button on the base model # product page
2. To build a manual product code on this datasheet choose from the options listed below in blue font and add the suffix to the base model #

GENERAL

Series: Dixit
Subseries: Dixit RA8
Brand: Ivela
Division: Architectural
Mounting Type: Recessed
Mounting Location: Ceiling
Subcategory: Downlight

PHYSICAL

Shape: Round
Diameter (mm): 96
Diameter (in): 3 3/4
Height (mm): 110
Height (in): 4 5/16
Min. Recessing Depth (mm): 150
Min. Recessing Depth (in): 5 7/8
Light Distribution: Direct
Weight (kg): 0.4
Weight (lbs): 0.88
Diffuser: Clear Polycarbonate
Fixture Finish: MWH
Fixture Material: Aluminum Die Cast
Cut-out Measurements: 92mm / 3 5/8"

ELECTRICAL

Lamp Type: LED
Total Output Wattage (W): 9 / 12
Dimming: Tri-Mode (Non-Dimming and Phase Dimming (120Vac only) and 0-10V Dimming)
Driver Included: No
Driver Location: Recessed Housing
Driver Type: Constant Current - Universal
Driver Class: Class 2
Input Voltage (V): 120 - 277
Constant Current (MA): 250 / 350

LED

Number of LEDs: 1
Color Temperature (°K): 2700 / 3000
Max. Delivered Lumen (lm): 1096 / 1447
CRI: >80 CRI
Efficiency (%): 87.7
Lamp Life (hrs): 50000
Upon Request: 3500K upon request

OPTICAL

Optic°: 26
Beam Angle: Symmetric
Adjustability: Fixed
Upon Request: Optic 45° (mirror-metallized) / 65° (white)

RATINGS AND CERTIFICATIONS

Certified By: Certified for North American Standards
IP rating: IP44
IK Rating: IK08

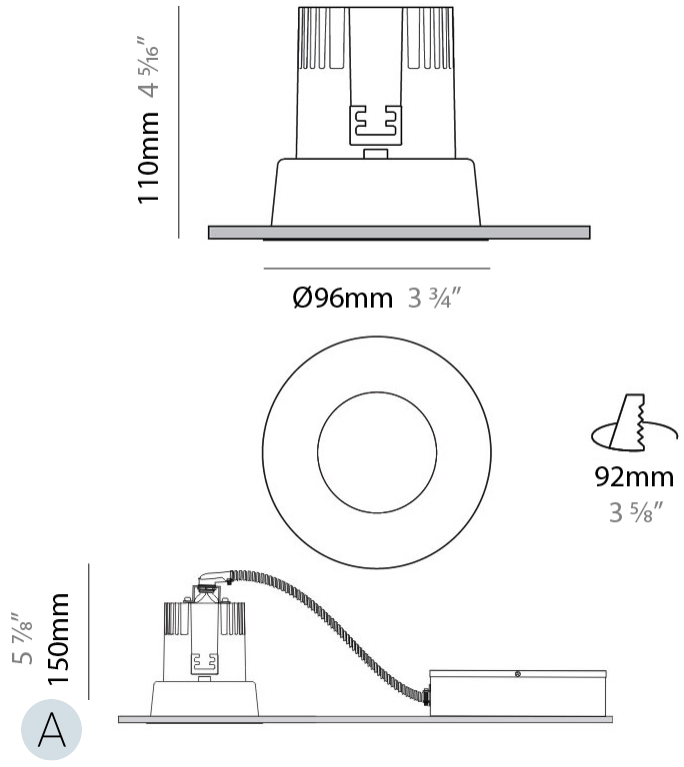

Zaneen Group Inc. © 2024, T 1800-388-3382, F 416-247-9319, www.zaneen.com
Available for International specifications by adding 'INT' at the end of the existing Model #. For assistance on 'custom' specifications, contact zteam@zaneen.com.
In a constant effort to supply the best product, we reserve the right to change specifications or materials without notice. The most recent specification sheets are found at zaneen.com

ZANEEN®

DIXIT RA8 RECESSED

PROJECT	
TYPE	
SPECIFIER	
QUANTITY	
DATE	

A56063-

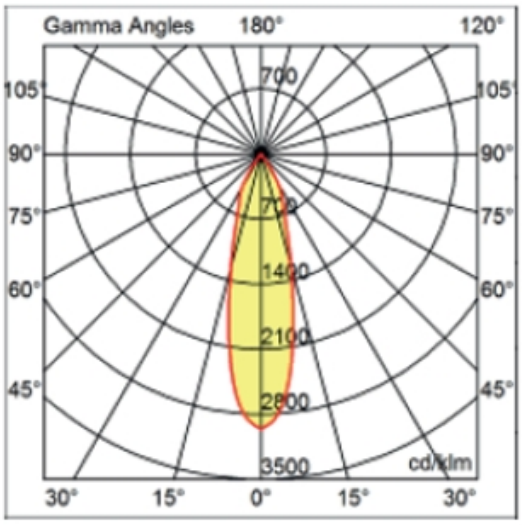

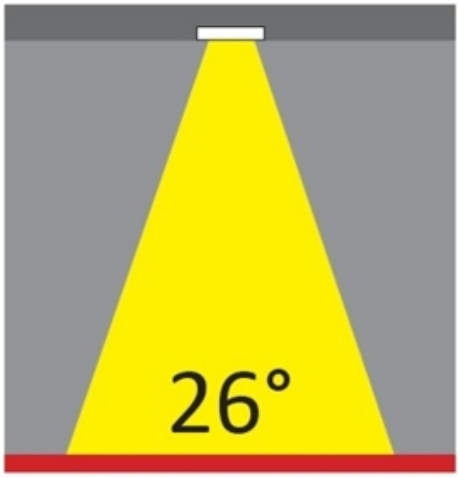

	DP	DV	
Dimming	Phase	0-10V	
Color Temperature	27K	30K	35K
	2700K	3000K	3500K

K°

Order Example K°

L5XXXXXX-DV-30K

0-10V 3000K

A

Zaneen Group Inc. © 2024, T 1800-388-3382, F 416-247-9319, www.zaneen.com

Available for International specifications by adding 'INT' at the end of the existing Model #. For assistance on 'custom' specifications, contact zteam@zaneen.com.
In a constant effort to supply the best product, we reserve the right to change specifications or materials without notice. The most recent specification sheets are found at zaneen.com

ZANEEN®

PROJECT	
TYPE	
SPECIFIER	
QUANTITY	
DATE	

DIXIT RA8 RECESSED

A56069-

base number | Color Temperature

1.To build a product code in our configurator select the specify button on the base model # product page
2. To build a manual product code on this datasheet choose from the options listed below in blue font and add the suffix to the base model #

GENERAL

Series: Dixit
Subseries: Dixit RA8
Brand: Ivela
Division: Architectural
Mounting Type: Recessed
Mounting Location: Ceiling
Subcategory: Downlight

PHYSICAL

Shape: Round
Diameter (mm): 80
Diameter (in): 3 1/8
Height (mm): 74
Height (in): 2 15/16
Min. Recessing Depth (mm): 114
Min. Recessing Depth (in): 4 1/2
Light Distribution: Direct
Weight (kg): 0.4
Weight (lbs): 0.88
Diffuser: Clear Polycarbonate
Fixture Finish: MWH
Fixture Material: Aluminum Die Cast
Cut-out Measurements: 70mm / 2 3/4"

ELECTRICAL

Lamp Type: LED
Total Output Wattage (W): 9 / 12
Dimming: Tri-Mode (Non-Dimming and Phase Dimming (120Vac only) and 0-10V Dimming)
Driver Included: No
Driver Location: Recessed Housing
Driver Type: Constant Current - Universal
Driver Class: Class 2
Input Voltage (V): 120 - 277
Constant Current (MA): 250 / 350

LED

Number of LEDs: 1
Color Temperature (°K): 2700 / 3000
Max. Delivered Lumen (lm): 1096 / 1447
CRI: >80 CRI
Efficiency (%): 88
Lamp Life (hrs): 50000
Upon Request: 3500K upon request

OPTICAL

Optic°: 26
Adjustability: Fixed
Upon Request: Optic 45° (mirror-metallized) / 65° (white)

RATINGS AND CERTIFICATIONS

Certified By: Certified for North American Standards
IP rating: IP44
IK Rating: IK08
Glare Rating: ≤ 19

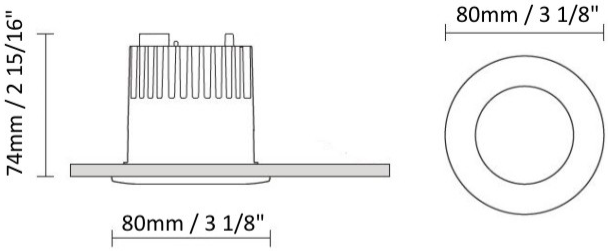

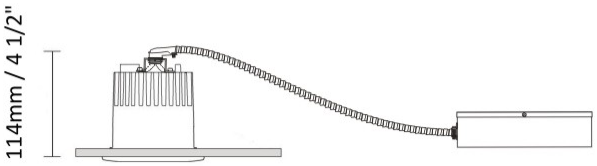

A

Zaneen Group Inc. © 2024, T 1800-388-3382, F 416-247-9319, www.zaneen.com
Available for International specifications by adding 'INT' at the end of the existing Model #. For assistance on 'custom' specifications, contact zteam@zaneen.com.
In a constant effort to supply the best product, we reserve the right to change specifications or materials without notice. The most recent specification sheets are found at zaneen.com

ZANEEN®

DIXIT RA8 RECESSED

PROJECT	
TYPE	
SPECIFIER	
QUANTITY	
DATE	

A56069-

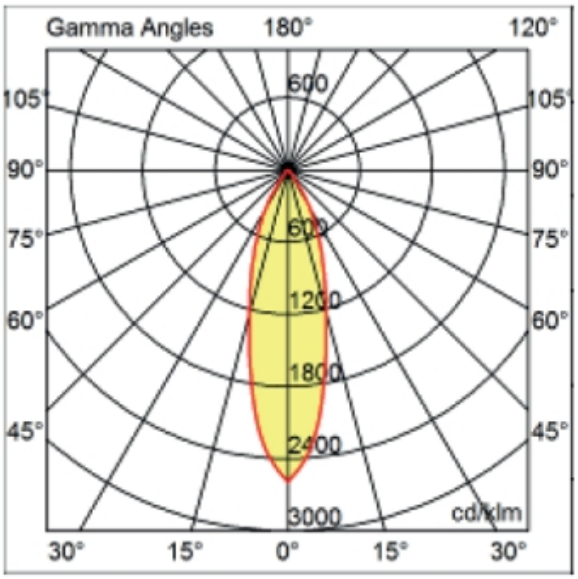

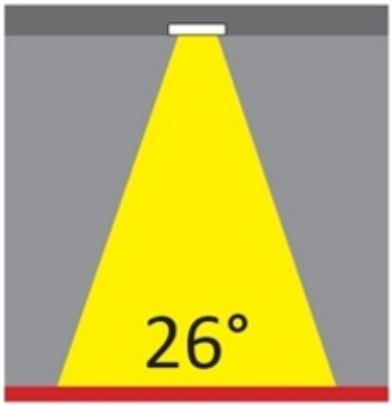

	DP	DV
Dimming	Phase	0-10V

	27K	30K	35K	40K	K°
Color Temperature	2700K	3000K	3500K	4000K	

Order Example K°

L5XXXXXX-DV-30K

0-10V 3000K

A

Zaneen Group Inc. © 2024, T 1800-388-3382, F 416-247-9319, www.zaneen.com

Available for International specifications by adding 'INT' at the end of the existing Model #. For assistance on 'custom' specifications, contact zteam@zaneen.com.
In a constant effort to supply the best product, we reserve the right to change specifications or materials without notice. The most recent specification sheets are found at zaneen.com

ZANEEN®

PROJECT	
TYPE	
SPECIFIER	
QUANTITY	
DATE	

DIXIT RA14 RECESSED

A56093-

base number — Color Temperature

1.To build a product code in our configurator select the specify button on the base model # product page
2. To build a manual product code on this datasheet choose from the options listed below in blue font and add the suffix to the base model #

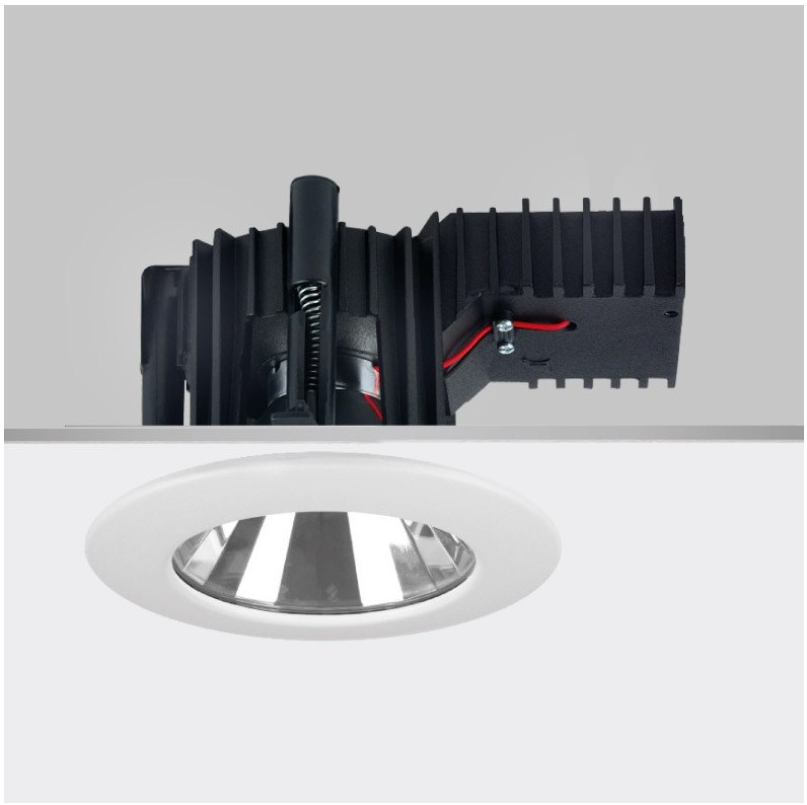

GENERAL

Series: Dixit
Subseries: Dixit RA14
Brand: Ivela
Division: Architectural
Mounting Type: Recessed
Mounting Location: Ceiling
Subcategory: Downlight

PHYSICAL

Shape: Round
Diameter (mm): 140
Diameter (in): 5 1/2
Height (mm): 92
Height (in): 3 5/8
Min. Recessing Depth (mm): 132
Min. Recessing Depth (in): 5 3/16
Light Distribution: Direct
Weight (kg): 0.7
Weight (lbs): 1.54
Diffuser: Clear Polycarbonate
Fixture Finish: MWH
Fixture Material: Aluminum Die Cast
Cut-out Measurements: 126mm / 4 15/16"

ELECTRICAL

Lamp Type: LED
Total Output Wattage (W): 26 / 33 / 38
Dimming: Tri-Mode (Non-Dimming and Phase Dimming (120Vac only) and 0-10V Dimming)
Driver Included: No
Driver Location: Recessed Housing
Driver Type: Constant Current - Universal
Driver Class: Class 2
Input Voltage (V): 120 - 277
Constant Current (MA): 700 / 900 / 1050

LED

Number of LEDs: 1
Color Temperature (°K): 2700 / 3000 / 4000
Max. Delivered Lumen (lm): 2924 - 3100 / 3655 - 3748 / 4214 - 4300
CRI: >85 CRI
Efficiency (%): 86
Lamp Life (hrs): 50000
Upon Request: 3500K

OPTICAL

Optic°: 60
Beam Angle: Symmetric
Adjustability: Fixed

RATINGS AND CERTIFICATIONS

Certified By: CSA Certified to UL and CSA Standards
IP rating: IP44
IK Rating: IK08

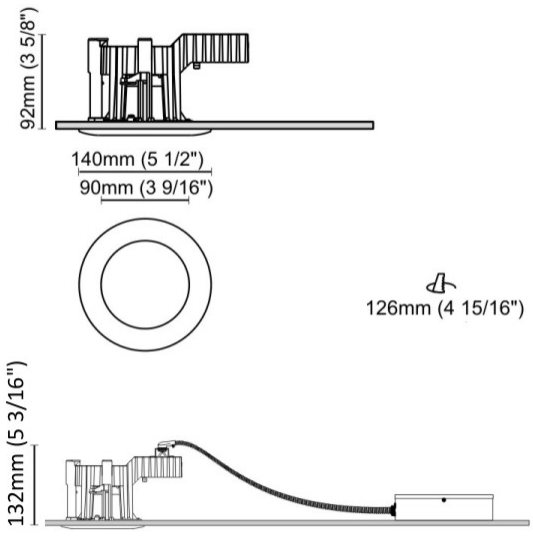

A

Zaneen Group Inc. © 2024, T 1800-388-3382, F 416-247-9319, www.zaneen.com
Available for International specifications by adding 'INT' at the end of the existing Model #. For assistance on 'custom' specifications, contact zteam@zaneen.com.
In a constant effort to supply the best product, we reserve the right to change specifications or materials without notice. The most recent specification sheets are found at zaneen.com

ZANEEN®

DIXIT RA14 RECESSED

PROJECT	
TYPE	
SPECIFIER	
QUANTITY	
DATE	

A56093-

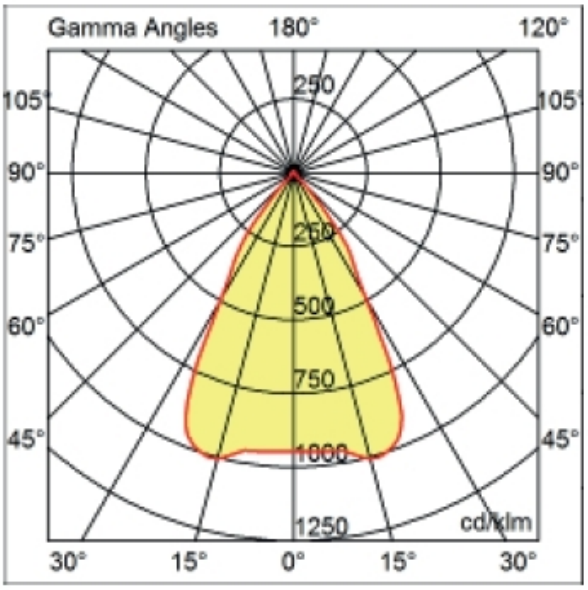

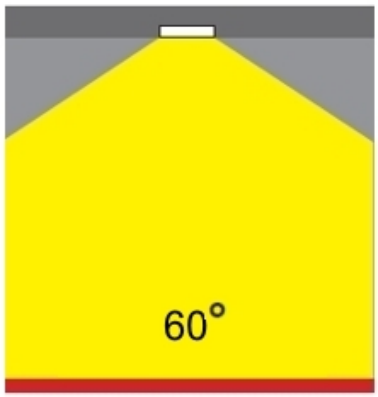

Matte White

Silver

	DP	DV
Dimming	Phase	0-10V

	27K	30K	35K	40K	K°
Color Temperature	2700K	3000K	3500K	4000K	

Order Example K°

L5XXXXXX-DV-30K

0-10V 3000K

A

Zaneen Group Inc. © 2024, T 1800-388-3382, F 416-247-9319, www.zaneen.com

Available for International specifications by adding 'INT' at the end of the existing Model #. For assistance on 'custom' specifications, contact zteam@zaneen.com.
In a constant effort to supply the best product, we reserve the right to change specifications or materials without notice. The most recent specification sheets are found at zaneen.com

ZANEEN®

PROJECT	
TYPE	
SPECIFIER	
QUANTITY	
DATE	

DIXIT RA8 RECESSED

A56121-

base number | Color Temperature

1.To build a product code in our configurator select the specify button on the base model # product page
2. To build a manual product code on this datasheet choose from the options listed below in blue font and add the suffix to the base model #

GENERAL

Series: Dixit
Subseries: Dixit RA8
Brand: Ivela
Division: Architectural
Mounting Type: Recessed
Mounting Location: Ceiling
Subcategory: Downlight

PHYSICAL

Shape: Round
Diameter (mm): 80
Diameter (in): 3 1/8
Height (mm): 50
Height (in): 1 1 15/16
Min. Recessing Depth (mm): 90
Min. Recessing Depth (in): 3 9/16
Light Distribution: Direct
Weight (kg): 0.4
Weight (lbs): 0.88
Diffuser: Clear Polycarbonate
Fixture Finish: MWH
Fixture Material: Aluminum Die Cast
Cut-out Measurements: 70mm / 2 3/4"

ELECTRICAL

Lamp Type: LED
Total Output Wattage (W): 5.5 / 8.5
Dimming: Tri-Mode (Non-Dimming and Phase Dimming (120Vac only) and 0-10V Dimming)
Driver Included: No
Driver Location: Recessed Housing
Driver Type: Constant Current - Universal
Driver Class: Class 2
Input Voltage (V): 120 - 277
Constant Current (MA): 350 / 500

LED

Number of LEDs: 1
Color Temperature (°K): 2700 / 3000 / 3500 / 4000
Max. Delivered Lumen (lm): 501 / 638
CRI: >90 CRI
Efficiency (%): 91
Lamp Life (hrs): 50000

OPTICAL

Reflector°: Mirror-metallized thermoplastic material
Optic°: 26
Beam Angle: Symmetric
Adjustability: Fixed
Upon Request: Optic 45° (mirror-metallized) / 65° (white)

RATINGS AND CERTIFICATIONS

Certified By: CSA Certified to UL and CSA Standards
IP rating: IP44
IK Rating: IK08

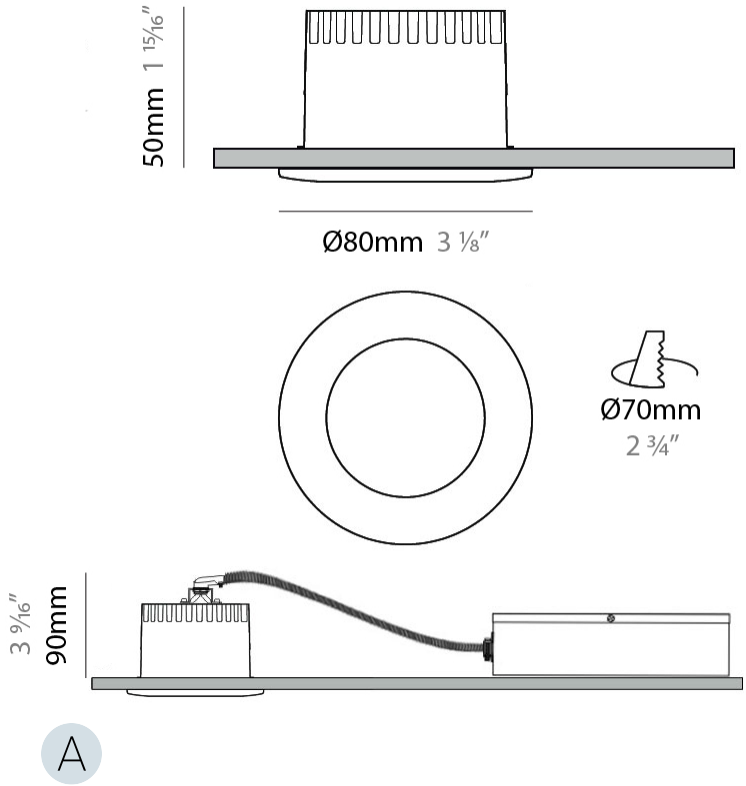

Zaneen Group Inc. © 2024, T 1800-388-3382, F 416-247-9319, www.zaneen.com
Available for International specifications by adding 'INT' at the end of the existing Model #. For assistance on 'custom' specifications, contact zteam@zaneen.com.
In a constant effort to supply the best product, we reserve the right to change specifications or materials without notice. The most recent specification sheets are found at zaneen.com

ZANEEN®

PROJECT	
TYPE	
SPECIFIER	
QUANTITY	
DATE	

DIXIT RA8 RECESSED

A56121-

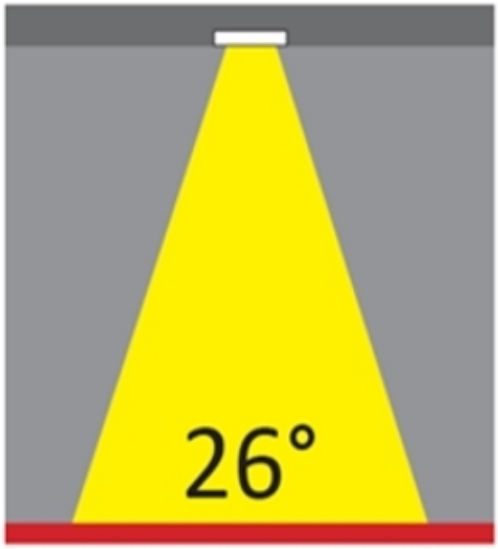

	DP	DV
Dimming	Phase	0-10V

	27K	30K	35K	40K	K°
Color Temperature	2700K	3000K	3500K	4000K	

Order Example K°

L5XXXXXX-DV-30K

0-10V 3000K

A

Zaneen Group Inc. © 2024, T 1800-388-3382, F 416-247-9319, www.zaneen.com

Available for International specifications by adding 'INT' at the end of the existing Model #. For assistance on 'custom' specifications, contact zteam@zaneen.com.
In a constant effort to supply the best product, we reserve the right to change specifications or materials without notice. The most recent specification sheets are found at zaneen.com

ZANEEN®

DIXIT

COLOR FINISH CHART

PROJECT	
TYPE	
SPECIFIER	
QUANTITY	
DATE	

Fixture Finish

Matte White - MWH

Digital: Not all screens are calibrated the same, and therefore, colors will appear differently between screens.
Physical: When texture is involved, there will be variations in color, character and tone within a product series and between product families.

A

Zaneen Group Inc. © 2024, T 1800-388-3382, F 416-247-9319, www.zaneen.com

Available for International specifications by adding 'INT' at the end of the existing Model #. For assistance on 'custom' specifications, contact zteam@zaneen.com.
In a constant effort to supply the best product, we reserve the right to change specifications or materials without notice. The most recent specification sheets are found at zaneen.com

ZANEEN®

DIXIT

PROJECT	
TYPE	
SPECIFIER	
QUANTITY	
DATE	

LEGEND

	floor-mounted		pivotable		special LED (upon request) RGB, RGBW, tunable, gold+, meat+, art+, fashion+
	wall and ceiling: recessed and surface mounted		rotating		warm dim / natural dimming LED
	ceiling-mounted and wall-mounted		illuminate tilted		rechargeable battery powered
	wall-mounted		color of suspension cable		fixture with natural vivid LED (upon request)
	omni-directional light distribution		length of suspension cable	CRI	color rendering index
	direct light distribution		reflector degree selection	°K	color temperature
	direct/indirect light distribution		super spot	LM	lumen (luminous flux)
	indirect light distribution		lens	LM/W	efficacy (lumens per watt)
	asymmetric light distribution		lens pack	UGR	Unified Glare Rating (UGR) range from 5-40
	aura light distribution		shine ring	316	marine grade (AISI 316 stainless steel)
	round wall or ceiling cut-out		integrated shine ring with diffuser		walk on
	square wall or ceiling cut-out		free individual colors 01-29		drive on
	the supplied jig specifies the cutout dimensions		individual colors: 00 (free of charge), 01-25 (extra charge)	DSC	Dark Sky Compliance
M	minimum distance (meters) lamp - object		luminaire part to be colored (F1)		Americans with Disabilities Act (less than 4" off the wall located between 27"-84" from floor)
	recessed depth		luminaire part to be colored (F2)		lamp protected against explosion
	ceiling thickness in mm		luminaire part to be colored (F3)		blown glass using traditional methods by master glass blower
	ceiling thickness selection		luminaire part to be colored (F4)		acoustic material
Dimmable	dimmable DP (phase), DV (0-10V), DD (dali), DS (step-dim)		luminaire part to be colored (F5)		protection class I, protection insulation
INCLUDED	included or excluded LED driver/transformer/ control gear		color of 3-circuit adaptor		protection class II, protection insulation
	separately switchable		indirect diffuser	ETL	ETL Certified to UL and CSA Standards
	sensor	D	direct diffuser	cULus	UL Certified to UL and CSA Standards
	remote control		ball-proof (upon request)	CSA	CSA Certified to UL and CSA Standards
	available upon request		accessory		Certified for North American Standards

IP RATING

IP20	protected against ingress of solid bodies greater than 12.5mm (finger)
IP33	protected against ingress of solid bodies greater than 2.5mm protected against sprays of water up to 60 degrees from the vertical (rain)
IP40	protected against ingress of solid bodies greater than 1mm (wire) no protection against the ingress of moisture
IP43	protected against ingress of solid bodies greater than 1mm (wire) protected against sprays of water up to 60 degrees from the vertical (rain)
IP44	protected against ingress of solid bodies greater than 1mm (wire) protected against water splashed from all directions
IP54	protected against limited ingress of dust (wet rooms/covered outdoor areas) protected against water splashed from all directions
IP65	protected against ingress of dust protected against jets of water
IP66	protected against ingress of dust protected against powerful jets of water or heavy seas
IP67	protected against ingress of dust protected against immersion of water between 15cm - 1m for 30 minutes
IP68	protected against ingress of dust protected against immersion of water under pressure for long periods

IK RATING

IK01	protected against 0.14 joules impact (equivalent to 0.25kg mass dropped from 56mm above the surface)
IK02	protected against 0.2 joules impact (equivalent to 0.25kg mass dropped from 80mm above the surface)
IK03	protected against 0.35 joules impact (equivalent to 0.25kg mass dropped from 140mm above the surface)
IK04	protected against 0.5 joules impact (equivalent to 0.25kg mass dropped from 200mm above the surface)
IK05	protected against 0.7 joules impact (equivalent to 0.25kg mass dropped from 280mm above the surface)
IK06	protected against 1 joules impact (equivalent to 0.25kg mass dropped from 400mm above the surface)
IK07	protected against 2 joules impact (equivalent to 0.5kg mass dropped from 400mm above the surface)
IK08	protected against 5 joules impact (equivalent to 1.7kg mass dropped from 300mm above the surface)
IK09	protected against 10 joules impact (equivalent to 5.0kg mass dropped from 200mm above the surface)
IK10	protected against 20 joules impact (equivalent to 5.0kg mass dropped from 400mm above the surface)