ZANEEN®

PROJECT	
TYPE	
SPECIFIER	
QUANTITY	
DATE	

PARIGI CIPOLLA MONOPOINT SUSPENSION

D141075-

base number — Finish Options

1.To build a product code in our configurator select the specify button on the base model # product page
2. To build a manual product code on this datasheet choose from the options listed below in blue font and add the suffix to the base model #

GENERAL

Series: Parigi
Subseries: Parigi Cipolla Monopoint
Brand: Cangini & Tucci
Division: Design
Mounting Type: Suspension
Mounting Location: Ceiling
Subcategory: Pendant

PHYSICAL

Shape: Sphere
Diameter (mm): 160
Diameter (in): 6 5/16
Height (mm): 120
Height (in): 4 3/4
Max. Overall Height (mm): 1620
Max. Overall Height (in): 63 3/4
Light Distribution: Omnidirectional
Weight (kg): 0.45
Weight (lbs): 0.99
Fixture Finish: AMB / GRN / PNK / RUB / SKB / SMK / TOB / TRA
Holder Finish: CHR
Fixture Material: Glass / Metal
Cable Details: 1500mm Cable

ELECTRICAL

Number of Lamps: 1
Lamp Type: LED Retrofit
Bulb Included: Bulb Not Included
Max. Wattage Per Lamp (W): 4
Lamp Base: E12
Input Voltage (V): 120

LED

OPTICAL

RATINGS AND CERTIFICATIONS

Certified By: Certified for North American Standards
IP rating: IP20

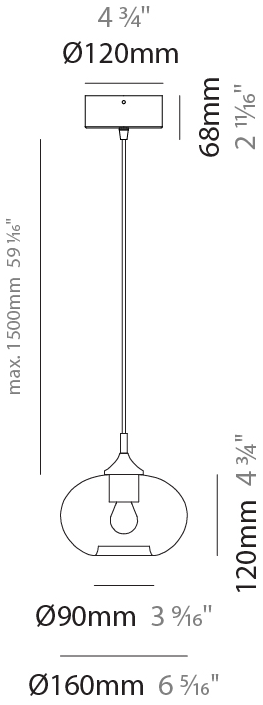

D

Zaneen Group Inc. © 2024, T 1800-388-3382, F 416-247-9319, www.zaneen.com

Available for International specifications by adding 'INT' at the end of the existing Model #. For assistance on 'custom' specifications, contact zteam@zaneen.com.
In a constant effort to supply the best product, we reserve the right to change specifications or materials without notice. The most recent specification sheets are found at zaneen.com

ZANEEN®

PROJECT	
TYPE	
SPECIFIER	
QUANTITY	
DATE	

PARIGI CIPOLLA MONOPOINT SUSPENSION

D141075-

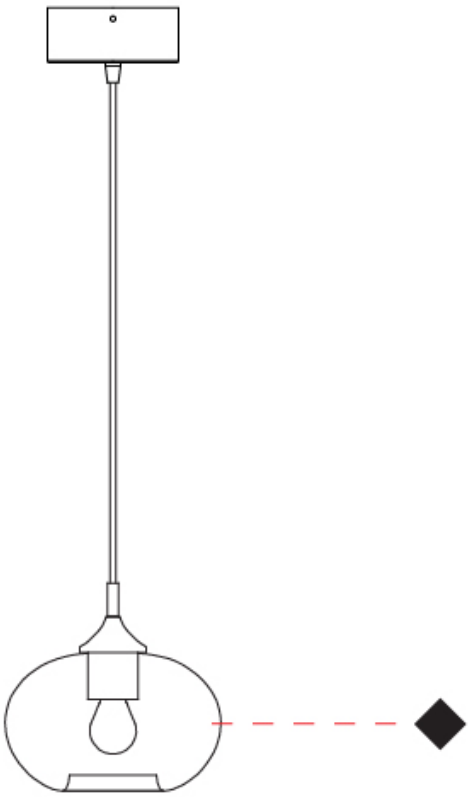

D

Zaneen Group Inc. © 2024, T 1800-388-3382, F 416-247-9319, www.zaneen.com

Available for International specifications by adding 'INT' at the end of the existing Model #. For assistance on 'custom' specifications, contact zteam@zaneen.com.
In a constant effort to supply the best product, we reserve the right to change specifications or materials without notice. The most recent specification sheets are found at zaneen.com

ZANEEN®

PROJECT	
TYPE	
SPECIFIER	
QUANTITY	
DATE	

PARIGI CIPOLLA MONOPOINT SUSPENSION

D141076-

base number — Finish Options

1.To build a product code in our configurator select the specify button on the base model # product page
2. To build a manual product code on this datasheet choose from the options listed below in blue font and add the suffix to the base model #

GENERAL

Series: Parigi
Subseries: Parigi Cipolla Monopoint
Brand: Cangini & Tucci
Division: Design
Mounting Type: Suspension
Mounting Location: Ceiling
Subcategory: Pendant

PHYSICAL

Shape: Sphere
Diameter (mm): 220
Diameter (in): 8 11/16
Height (mm): 150
Height (in): 5 7/8
Max. Overall Height (mm): 1650
Max. Overall Height (in): 64 15/16
Light Distribution: Omnidirectional
Weight (kg): 1.10
Weight (lbs): 2.43
Fixture Finish: AMB / GRN / PNK / RUB / SKB / SMK / TOB / TRA
Holder Finish: CHR
Fixture Material: Glass / Metal
Cable Details: 1500mm Cable

ELECTRICAL

Number of Lamps: 1
Lamp Type: LED Retrofit
Bulb Included: Bulb Not Included
Max. Wattage Per Lamp (W): 8
Lamp Base: E26
Input Voltage (V): 120
Upon Request: 277Vac / GU24

LED

OPTICAL

RATINGS AND CERTIFICATIONS

Certified By: Certified for North American Standards
IP rating: IP20

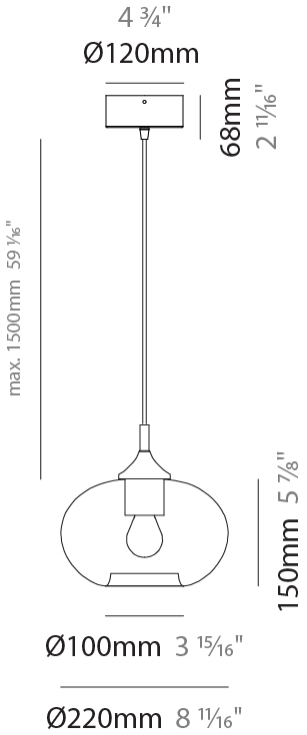

D

Zaneen Group Inc. © 2024, T 1800-388-3382, F 416-247-9319, www.zaneen.com

Available for International specifications by adding 'INT' at the end of the existing Model #. For assistance on 'custom' specifications, contact zteam@zaneen.com.
In a constant effort to supply the best product, we reserve the right to change specifications or materials without notice. The most recent specification sheets are found at zaneen.com

ZANEEN®

PROJECT	
TYPE	
SPECIFIER	
QUANTITY	
DATE	

PARIGI CIPOLLA MONOPOINT SUSPENSION

D141076-

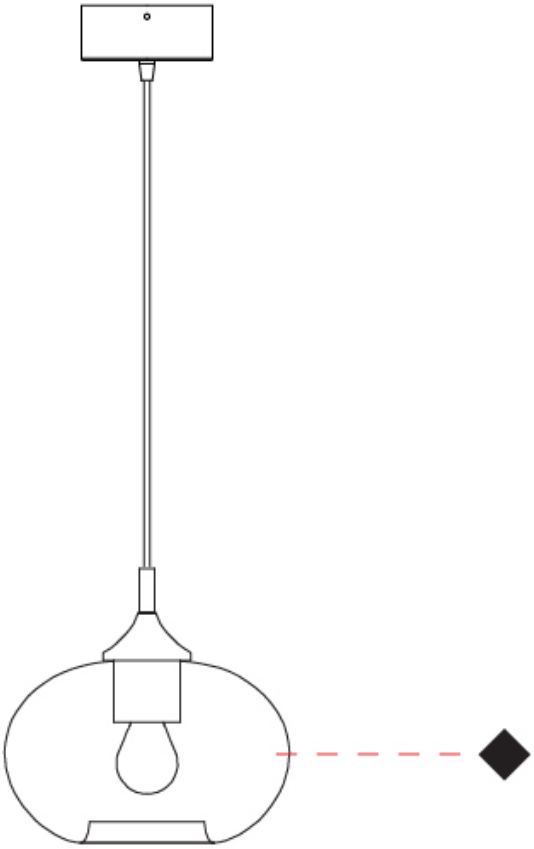

D

Zaneen Group Inc. © 2024, T 1800-388-3382, F 416-247-9319, www.zaneen.com

Available for International specifications by adding 'INT' at the end of the existing Model #. For assistance on 'custom' specifications, contact zteam@zaneen.com.
In a constant effort to supply the best product, we reserve the right to change specifications or materials without notice. The most recent specification sheets are found at zaneen.com

ZANEEN®

PROJECT	
TYPE	
SPECIFIER	
QUANTITY	
DATE	

PARIGI CIPOLLA MONOPOINT SUSPENSION

D141077-

base number — Finish Options

1.To build a product code in our configurator select the specify button on the base model # product page
2. To build a manual product code on this datasheet choose from the options listed below in blue font and add the suffix to the base model #

GENERAL

Series: Parigi
Subseries: Parigi Cipolla Monopoint
Brand: Cangini & Tucci
Division: Design
Mounting Type: Suspension
Mounting Location: Ceiling
Subcategory: Pendant

PHYSICAL

Shape: Sphere
Diameter (mm): 300
Diameter (in): 11 13/16
Height (mm): 190
Height (in): 7 1/2
Max. Overall Height (mm): 1690
Max. Overall Height (in): 66 9/16
Light Distribution: Omnidirectional
Weight (kg): 1.40
Weight (lbs): 3.09
Fixture Finish: AMB / GRN / PNK / RUB / SKB / SMK / TOB / TRA
Holder Finish: CHR
Fixture Material: Glass / Metal
Cable Details: 1500mm Cable

ELECTRICAL

Number of Lamps: 1
Lamp Type: LED Retrofit
Bulb Included: Bulb Not Included
Max. Wattage Per Lamp (W): 8
Lamp Base: E26
Input Voltage (V): 120
Upon Request: 277Vac / GU24

LED

OPTICAL

RATINGS AND CERTIFICATIONS

Certified By: Certified for North American Standards
IP rating: IP20

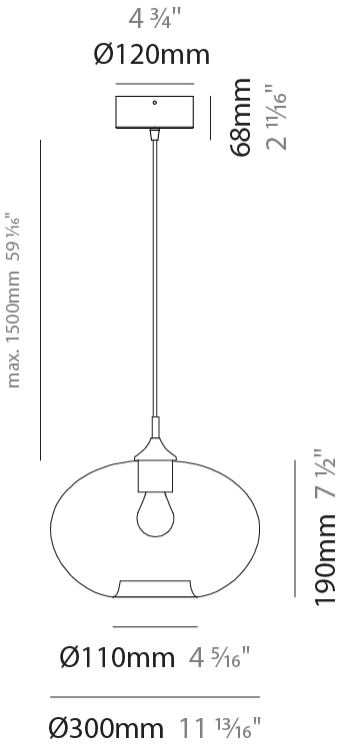

D

Zaneen Group Inc. © 2024, T 1800-388-3382, F 416-247-9319, www.zaneen.com

Available for International specifications by adding 'INT' at the end of the existing Model #. For assistance on 'custom' specifications, contact zteam@zaneen.com.
In a constant effort to supply the best product, we reserve the right to change specifications or materials without notice. The most recent specification sheets are found at zaneen.com

ZANEEN®

PROJECT	
TYPE	
SPECIFIER	
QUANTITY	
DATE	

PARIGI CIPOLLA MONOPOINT SUSPENSION

D141077-

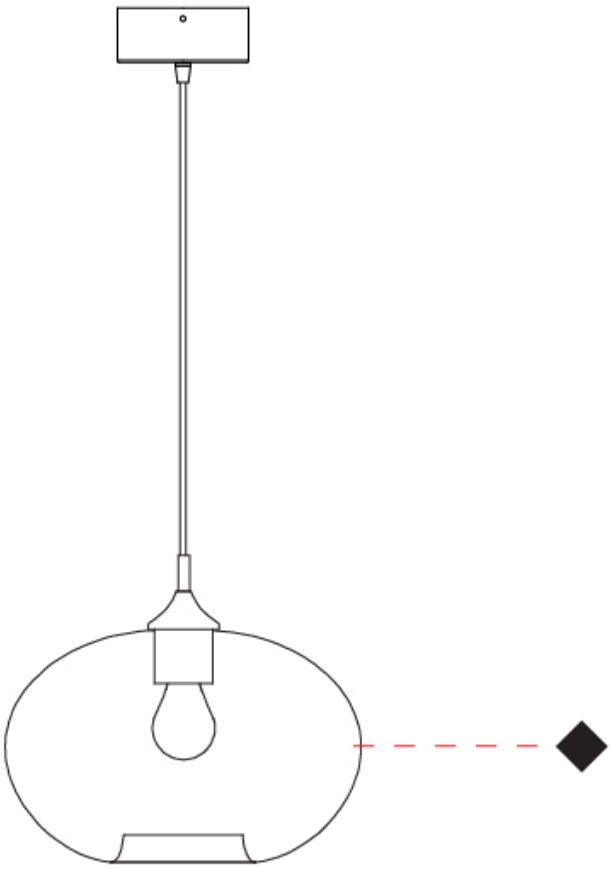

D

Zaneen Group Inc. © 2024, T 1800-388-3382, F 416-247-9319, www.zaneen.com

Available for International specifications by adding 'INT' at the end of the existing Model #. For assistance on 'custom' specifications, contact zteam@zaneen.com.
In a constant effort to supply the best product, we reserve the right to change specifications or materials without notice. The most recent specification sheets are found at zaneen.com

ZANEEN®

PROJECT	
TYPE	
SPECIFIER	
QUANTITY	
DATE	

PARIGI CIPOLLA MONOPOINT SUSPENSION

D141078-

base number — Finish Options

1.To build a product code in our configurator select the specify button on the base model # product page
2. To build a manual product code on this datasheet choose from the options listed below in blue font and add the suffix to the base model #

GENERAL

Series: Parigi
Subseries: Parigi Cipolla Monopoint
Brand: Cangini & Tucci
Division: Design
Mounting Type: Suspension
Mounting Location: Ceiling
Subcategory: Pendant

PHYSICAL

Shape: Sphere
Diameter (mm): 380
Diameter (in): 14 15/16
Height (mm): 250
Height (in): 9 13/16
Max. Overall Height (mm): 1750
Max. Overall Height (in): 68 7/8
Light Distribution: Omnidirectional
Weight (kg): 2.40
Weight (lbs): 5.29
Fixture Finish: AMB / GRN / PNK / RUB / SKB / SMK / TOB / TRA
Holder Finish: CHR
Fixture Material: Glass / Metal
Cable Details: 1500mm Cable

ELECTRICAL

Number of Lamps: 1
Lamp Type: LED Retrofit
Bulb Included: Bulb Not Included
Max. Wattage Per Lamp (W): 8
Lamp Base: E26
Input Voltage (V): 120
Upon Request: 277Vac / GU24

LED

OPTICAL

RATINGS AND CERTIFICATIONS

Certified By: Certified for North American Standards
IP rating: IP20

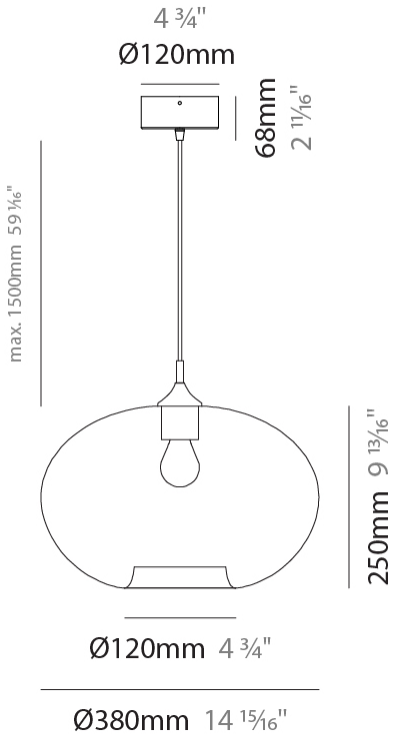

D

Zaneen Group Inc. © 2024, T 1800-388-3382, F 416-247-9319, www.zaneen.com

Available for International specifications by adding 'INT' at the end of the existing Model #. For assistance on 'custom' specifications, contact zteam@zaneen.com.
In a constant effort to supply the best product, we reserve the right to change specifications or materials without notice. The most recent specification sheets are found at zaneen.com

ZANEEN®

PROJECT	
TYPE	
SPECIFIER	
QUANTITY	
DATE	

PARIGI CIPOLLA MONOPOINT SUSPENSION

D141078-

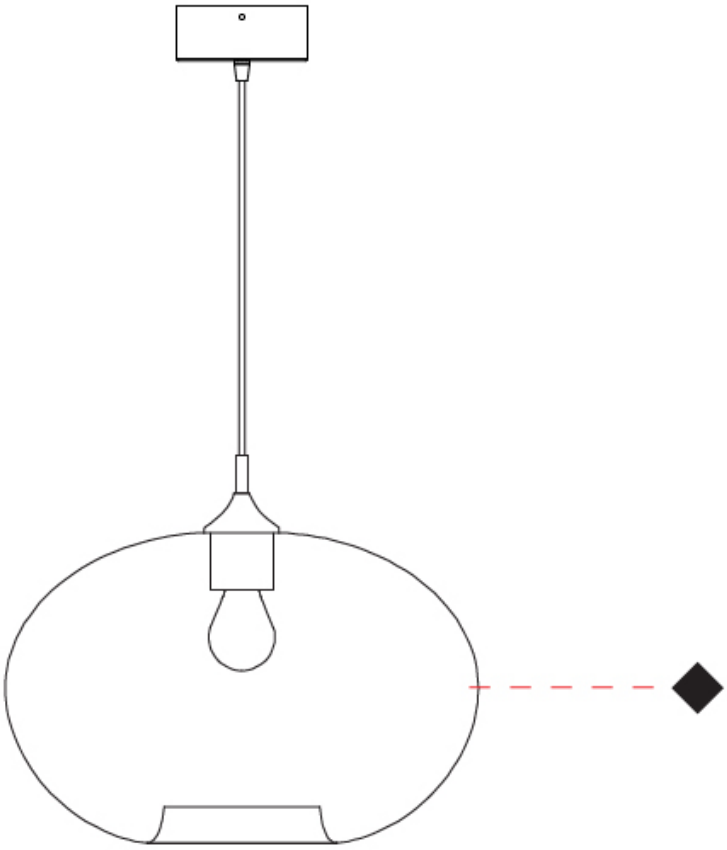

D

Zaneen Group Inc. © 2024, T 1800-388-3382, F 416-247-9319, www.zaneen.com

Available for International specifications by adding 'INT' at the end of the existing Model #. For assistance on 'custom' specifications, contact zteam@zaneen.com.
In a constant effort to supply the best product, we reserve the right to change specifications or materials without notice. The most recent specification sheets are found at zaneen.com

ZANEEN®

PROJECT	
TYPE	
SPECIFIER	
QUANTITY	
DATE	

PARIGI CIPOLLA 3 LIGHT CLUSTER SUSPENSION

D141083-

base number — Finish Options

1.To build a product code in our configurator select the specify button on the base model # product page
2. To build a manual product code on this datasheet choose from the options listed below in blue font and add the suffix to the base model #

GENERAL

Series: Parigi
Subseries: Parigi Cipolla 3 Light Cluster
Brand: Cangini & Tucci
Division: Design
Mounting Type: Suspension
Mounting Location: Ceiling
Subcategory: Pendant

PHYSICAL

Shape: Sphere
Diameter (mm): 430
Diameter (in): 16 15/16
Max. Overall Height (mm): 1500
Max. Overall Height (in): 59 1/16
Light Distribution: Omnidirectional
Weight (kg): 6.4
Weight (lbs): 14.2
Fixture Finish: AMB / GRN / PNK / RUB / SKB / SMK / TOB / TRA
Holder Finish: PSS
Fixture Material: Glass / Metal
Cable Details: 1500mm Cable

ELECTRICAL

Number of Lamps: 3
Lamp Type: LED Retrofit
Bulb Included: Bulb Not Included
Total Output Wattage (W): 20
Max. Wattage Per Lamp (W): 8 + 4
Lamp Base: E26 + E12
Input Voltage (V): 120

LED

OPTICAL

RATINGS AND CERTIFICATIONS

Certified By: Certified for North American Standards
IP rating: IP20

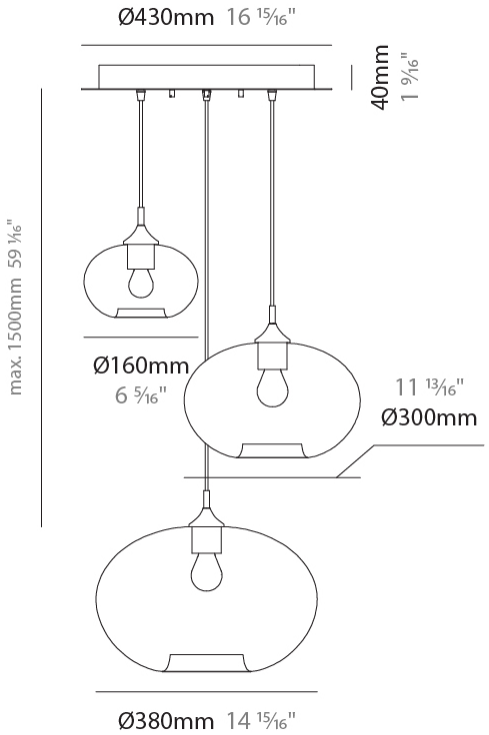

D

Zaneen Group Inc. © 2024, T 1800-388-3382, F 416-247-9319, www.zaneen.com

Available for International specifications by adding 'INT' at the end of the existing Model #. For assistance on 'custom' specifications, contact zteam@zaneen.com.
In a constant effort to supply the best product, we reserve the right to change specifications or materials without notice. The most recent specification sheets are found at zaneen.com

ZANEEN®

PROJECT	
TYPE	
SPECIFIER	
QUANTITY	
DATE	

PARIGI CIPOLLA 3 LIGHT CLUSTER SUSPENSION

D141083-

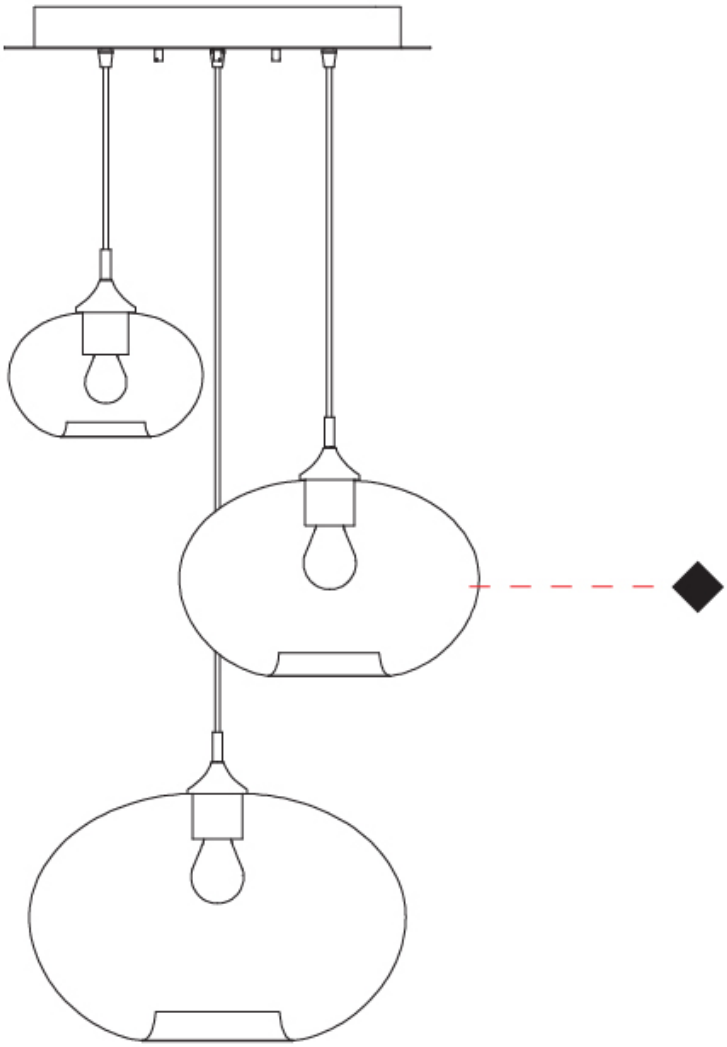

D

Zaneen Group Inc. © 2024, T 1800-388-3382, F 416-247-9319, www.zaneen.com

Available for International specifications by adding 'INT' at the end of the existing Model #. For assistance on 'custom' specifications, contact zteam@zaneen.com.
In a constant effort to supply the best product, we reserve the right to change specifications or materials without notice. The most recent specification sheets are found at zaneen.com

ZANEEN®

PROJECT	
TYPE	
SPECIFIER	
QUANTITY	
DATE	

PARIGI CIPOLLA MONOPOINT SUSPENSION

D141084-

base number — Finish Options

1.To build a product code in our configurator select the specify button on the base model # product page
2. To build a manual product code on this datasheet choose from the options listed below in blue font and add the suffix to the base model #

GENERAL

Series: Parigi
Subseries: Parigi Cipolla Monopoint
Brand: Cangini & Tucci
Division: Design
Mounting Type: Suspension
Mounting Location: Ceiling
Subcategory: Pendant

PHYSICAL

Shape: Sphere
Diameter (mm): 160
Diameter (in): 6 5/16
Height (mm): 120
Height (in): 4 3/4
Max. Overall Height (mm): 1620
Max. Overall Height (in): 63 3/4
Light Distribution: Omnidirectional
Weight (kg): 0.45
Weight (lbs): 0.99
Fixture Finish: AMB / GRN / PNK / RUB / SKB / SMK / TOB / TRA
Holder Finish: CHR
Fixture Material: Glass / Metal
Cable Details: 1500mm Cable

ELECTRICAL

Number of Lamps: 1
Lamp Type: LED Retrofit
Lamp Shape: A15
Bulb Included: Bulb Not Included
Max. Wattage Per Lamp (W): 4
Lamp Base: E12
Input Voltage (V): 120

LED

OPTICAL

RATINGS AND CERTIFICATIONS

Certified By: Certified for North American Standards
IP rating: IP20

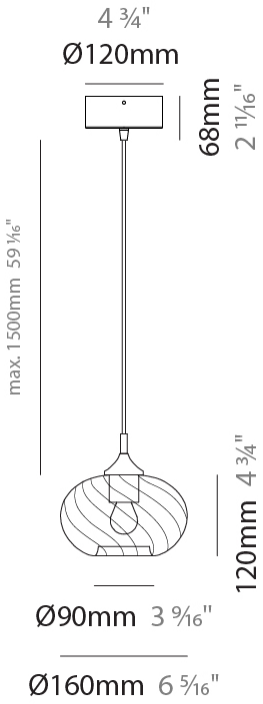

D

Zaneen Group Inc. © 2024, T 1800-388-3382, F 416-247-9319, www.zaneen.com

Available for International specifications by adding 'INT' at the end of the existing Model #. For assistance on 'custom' specifications, contact zteam@zaneen.com.
In a constant effort to supply the best product, we reserve the right to change specifications or materials without notice. The most recent specification sheets are found at zaneen.com

ZANEEN®

PROJECT	
TYPE	
SPECIFIER	
QUANTITY	
DATE	

PARIGI CIPOLLA MONOPOINT SUSPENSION

D141084-

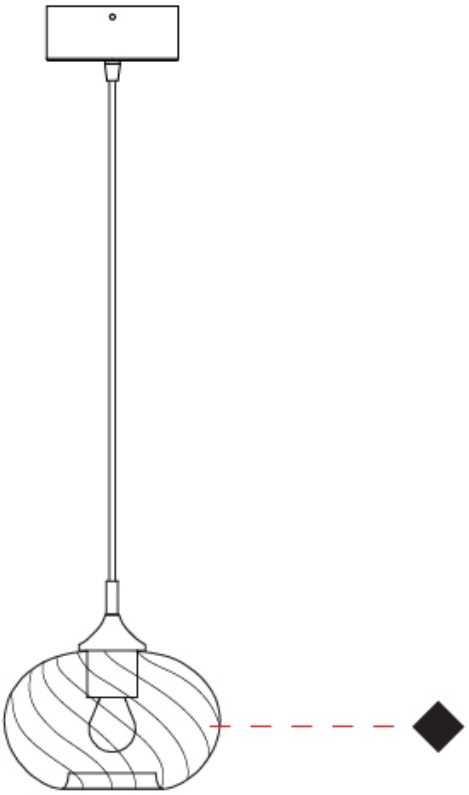

D

Zaneen Group Inc. © 2024, T 1800-388-3382, F 416-247-9319, www.zaneen.com

Available for International specifications by adding 'INT' at the end of the existing Model #. For assistance on 'custom' specifications, contact zteam@zaneen.com.
In a constant effort to supply the best product, we reserve the right to change specifications or materials without notice. The most recent specification sheets are found at zaneen.com

ZANEEN®

PROJECT	
TYPE	
SPECIFIER	
QUANTITY	
DATE	

PARIGI CIPOLLA MONOPOINT SUSPENSION

D141085-

base number — Finish Options

1.To build a product code in our configurator select the specify button on the base model # product page
2. To build a manual product code on this datasheet choose from the options listed below in blue font and add the suffix to the base model #

GENERAL

Series: Parigi
Subseries: Parigi Cipolla Monopoint
Brand: Cangini & Tucci
Division: Design
Mounting Type: Suspension
Mounting Location: Ceiling
Subcategory: Pendant

PHYSICAL

Shape: Sphere
Diameter (mm): 220
Diameter (in): 8 11/16
Height (mm): 150
Height (in): 5 7/8
Max. Overall Height (mm): 1650
Max. Overall Height (in): 64 15/16
Light Distribution: Omnidirectional
Weight (kg): 1.10
Weight (lbs): 2.43
Fixture Finish: AMB / GRN / PNK / RUB / SKB / SMK / TOB / TRA
Holder Finish: CHR
Fixture Material: Glass / Metal
Cable Details: 1500mm Cable

ELECTRICAL

Number of Lamps: 1
Lamp Type: LED Retrofit
Bulb Included: Bulb Not Included
Max. Wattage Per Lamp (W): 8
Lamp Base: E26
Input Voltage (V): 120
Upon Request: 277Vac / GU24

LED

OPTICAL

RATINGS AND CERTIFICATIONS

Certified By: Certified for North American Standards
IP rating: IP20

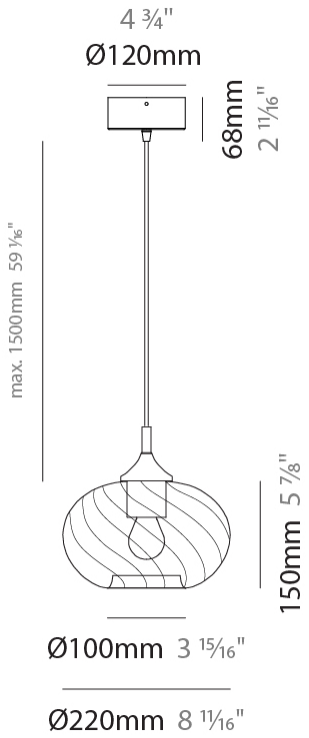

D

Zaneen Group Inc. © 2024, T 1800-388-3382, F 416-247-9319, www.zaneen.com

Available for International specifications by adding 'INT' at the end of the existing Model #. For assistance on 'custom' specifications, contact zteam@zaneen.com.
In a constant effort to supply the best product, we reserve the right to change specifications or materials without notice. The most recent specification sheets are found at zaneen.com

ZANEEN®

PROJECT	
TYPE	
SPECIFIER	
QUANTITY	
DATE	

PARIGI CIPOLLA MONOPOINT SUSPENSION

D141085-

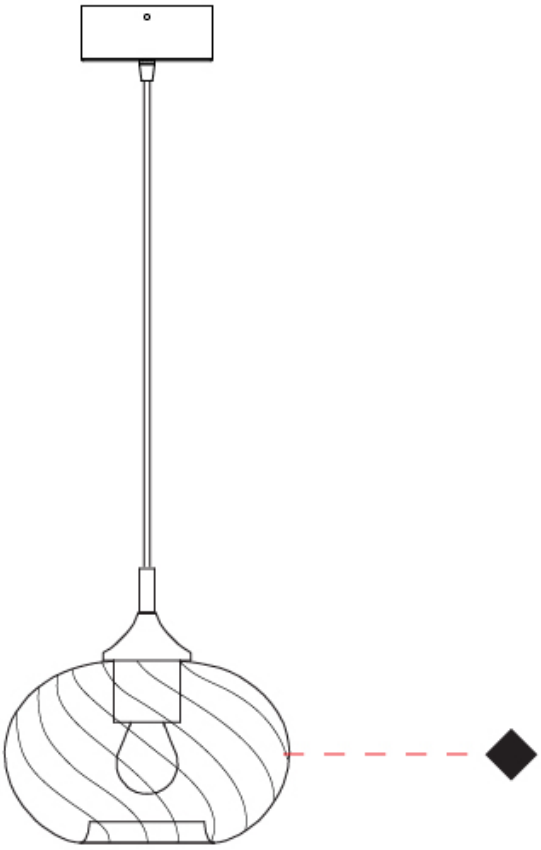

D

Zaneen Group Inc. © 2024, T 1800-388-3382, F 416-247-9319, www.zaneen.com

Available for International specifications by adding 'INT' at the end of the existing Model #. For assistance on 'custom' specifications, contact zteam@zaneen.com.
In a constant effort to supply the best product, we reserve the right to change specifications or materials without notice. The most recent specification sheets are found at zaneen.com

ZANEEN®

PROJECT	
TYPE	
SPECIFIER	
QUANTITY	
DATE	

PARIGI CIPOLLA MONOPOINT SUSPENSION

D141086-

base number — Finish Options

1.To build a product code in our configurator select the specify button on the base model # product page
2. To build a manual product code on this datasheet choose from the options listed below in blue font and add the suffix to the base model #

GENERAL

Series: Parigi
Subseries: Parigi Cipolla Monopoint
Brand: Cangini & Tucci
Division: Design
Mounting Type: Suspension
Mounting Location: Ceiling
Subcategory: Pendant

PHYSICAL

Shape: Sphere
Diameter (mm): 300
Diameter (in): 11 13/16
Height (mm): 190
Height (in): 7 1/2
Max. Overall Height (mm): 1690
Max. Overall Height (in): 66 9/16
Light Distribution: Omnidirectional
Weight (kg): 1.40
Weight (lbs): 3.09
Fixture Finish: AMB / GRN / PNK / RUB / SKB / SMK / TOB / TRA
Holder Finish: CHR
Fixture Material: Glass / Metal
Cable Details: 1500mm Cable

ELECTRICAL

Number of Lamps: 1
Lamp Type: LED Retrofit
Bulb Included: Bulb Not Included
Max. Wattage Per Lamp (W): 8
Lamp Base: E26
Input Voltage (V): 120
Upon Request: 277Vac / GU24

LED

OPTICAL

RATINGS AND CERTIFICATIONS

Certified By: Certified for North American Standards
IP rating: IP20

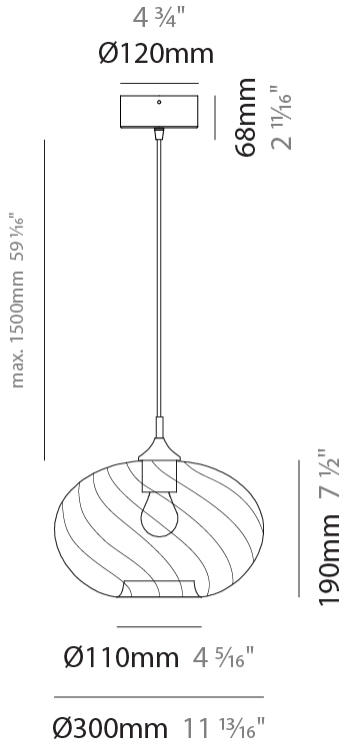

D

Zaneen Group Inc. © 2024, T 1800-388-3382, F 416-247-9319, www.zaneen.com

Available for International specifications by adding 'INT' at the end of the existing Model #. For assistance on 'custom' specifications, contact zteam@zaneen.com.
In a constant effort to supply the best product, we reserve the right to change specifications or materials without notice. The most recent specification sheets are found at zaneen.com

ZANEEN®

PROJECT	
TYPE	
SPECIFIER	
QUANTITY	
DATE	

PARIGI CIPOLLA MONOPOINT SUSPENSION

D141086-

D

Zaneen Group Inc. © 2024, T 1800-388-3382, F 416-247-9319, www.zaneen.com

Available for International specifications by adding 'INT' at the end of the existing Model #. For assistance on 'custom' specifications, contact zteam@zaneen.com.
In a constant effort to supply the best product, we reserve the right to change specifications or materials without notice. The most recent specification sheets are found at zaneen.com

ZANEEN®

PROJECT	
TYPE	
SPECIFIER	
QUANTITY	
DATE	

PARIGI CIPOLLA MONOPOINT SUSPENSION

D141087-

base number — Finish Options

1.To build a product code in our configurator select the specify button on the base model # product page
2. To build a manual product code on this datasheet choose from the options listed below in blue font and add the suffix to the base model #

GENERAL

Series: Parigi
Subseries: Parigi Cipolla Monopoint
Brand: Cangini & Tucci
Division: Design
Mounting Type: Suspension
Mounting Location: Ceiling
Subcategory: Pendant

PHYSICAL

Shape: Sphere
Diameter (mm): 380
Diameter (in): 14 15/16
Height (mm): 250
Height (in): 9 13/16
Max. Overall Height (mm): 1750
Max. Overall Height (in): 68 7/8
Light Distribution: Omnidirectional
Weight (kg): 2.40
Weight (lbs): 5.29
Fixture Finish: AMB / GRN / PNK / RUB / SKB / SMK / TOB / TRA
Holder Finish: CHR
Fixture Material: Glass / Metal
Cable Details: 1500mm Cable

ELECTRICAL

Number of Lamps: 1
Lamp Type: LED Retrofit
Bulb Included: Bulb Not Included
Max. Wattage Per Lamp (W): 8
Lamp Base: E26
Input Voltage (V): 120
Upon Request: 277Vac / GU24

LED

OPTICAL

RATINGS AND CERTIFICATIONS

Certified By: Certified for North American Standards
IP rating: IP20

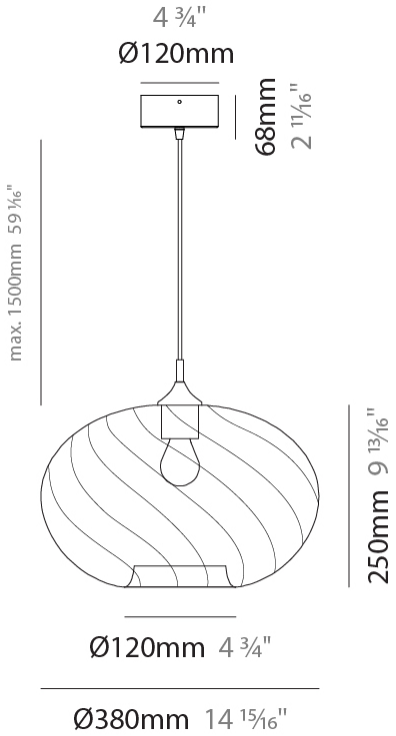

D

Zaneen Group Inc. © 2024, T 1800-388-3382, F 416-247-9319, www.zaneen.com
Available for International specifications by adding 'INT' at the end of the existing Model #. For assistance on 'custom' specifications, contact zteam@zaneen.com.
In a constant effort to supply the best product, we reserve the right to change specifications or materials without notice. The most recent specification sheets are found at zaneen.com

ZANEEN®

PROJECT	
TYPE	
SPECIFIER	
QUANTITY	
DATE	

PARIGI CIPOLLA MONOPOINT SUSPENSION

D141087-

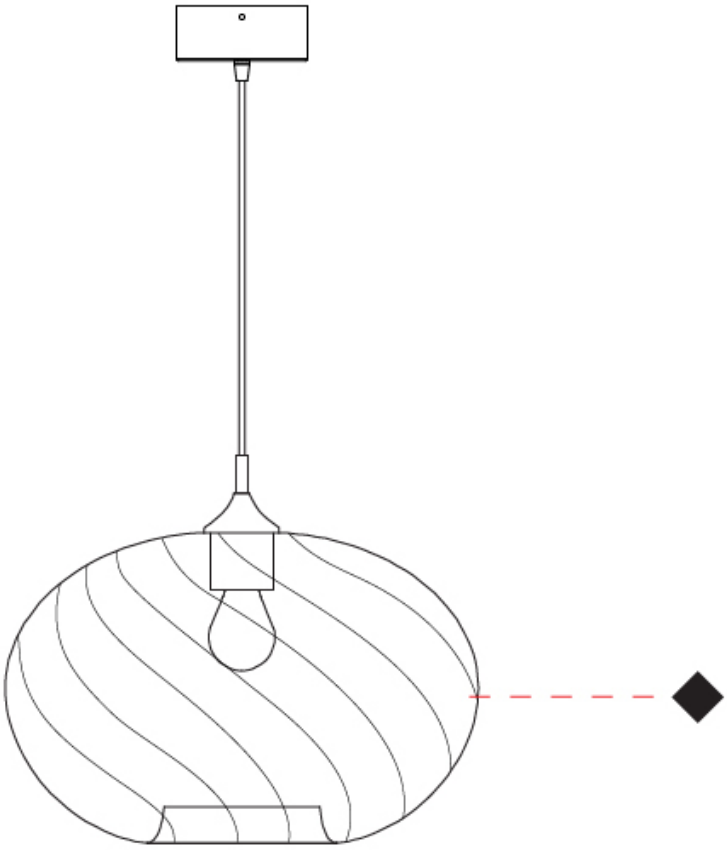

D

Zaneen Group Inc. © 2024, T 1800-388-3382, F 416-247-9319, www.zaneen.com

Available for International specifications by adding 'INT' at the end of the existing Model #. For assistance on 'custom' specifications, contact zteam@zaneen.com.
In a constant effort to supply the best product, we reserve the right to change specifications or materials without notice. The most recent specification sheets are found at zaneen.com

ZANEEN®

PROJECT	
TYPE	
SPECIFIER	
QUANTITY	
DATE	

PARIGI CIPOLLA 3 LIGHT CLUSTER SUSPENSION

D141092-

base number — Finish Options

1.To build a product code in our configurator select the specify button on the base model # product page
2. To build a manual product code on this datasheet choose from the options listed below in blue font and add the suffix to the base model #

GENERAL

Series: Parigi
Subseries: Parigi Cipolla 3 Light Cluster
Brand: Cangini & Tucci
Division: Design
Mounting Type: Suspension
Mounting Location: Ceiling
Subcategory: Pendant

PHYSICAL

Shape: Sphere
Diameter (mm): 430
Diameter (in): 16 15/16
Max. Overall Height (mm): 1500
Max. Overall Height (in): 59 1/16
Light Distribution: Omnidirectional
Weight (kg): 6.44
Weight (lbs): 14.17
Fixture Finish: AMB / GRN / PNK / RUB / SKB / SMK / TOB / TRA
Holder Finish: PSS
Fixture Material: Glass / Metal
Cable Details: 1500mm Cable

ELECTRICAL

Number of Lamps: 3
Lamp Type: LED Retrofit
Bulb Included: Bulb Not Included
Total Output Wattage (W): 20
Max. Wattage Per Lamp (W): 8 + 4
Lamp Base: E26 + E12
Input Voltage (V): 120

LED

OPTICAL

RATINGS AND CERTIFICATIONS

Certified By: Certified for North American Standards
IP rating: IP20

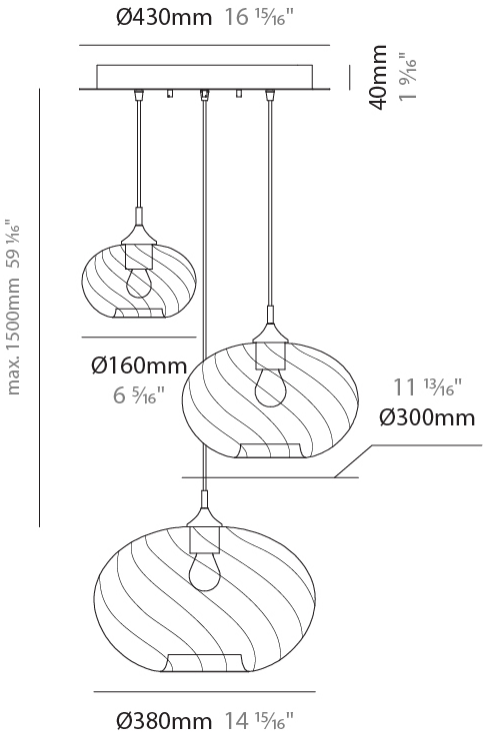

D

Zaneen Group Inc. © 2024, T 1800-388-3382, F 416-247-9319, www.zaneen.com

Available for International specifications by adding 'INT' at the end of the existing Model #. For assistance on 'custom' specifications, contact zteam@zaneen.com.
In a constant effort to supply the best product, we reserve the right to change specifications or materials without notice. The most recent specification sheets are found at zaneen.com

ZANEEN®

PROJECT	
TYPE	
SPECIFIER	
QUANTITY	
DATE	

PARIGI CIPOLLA 3 LIGHT CLUSTER SUSPENSION

D141092-

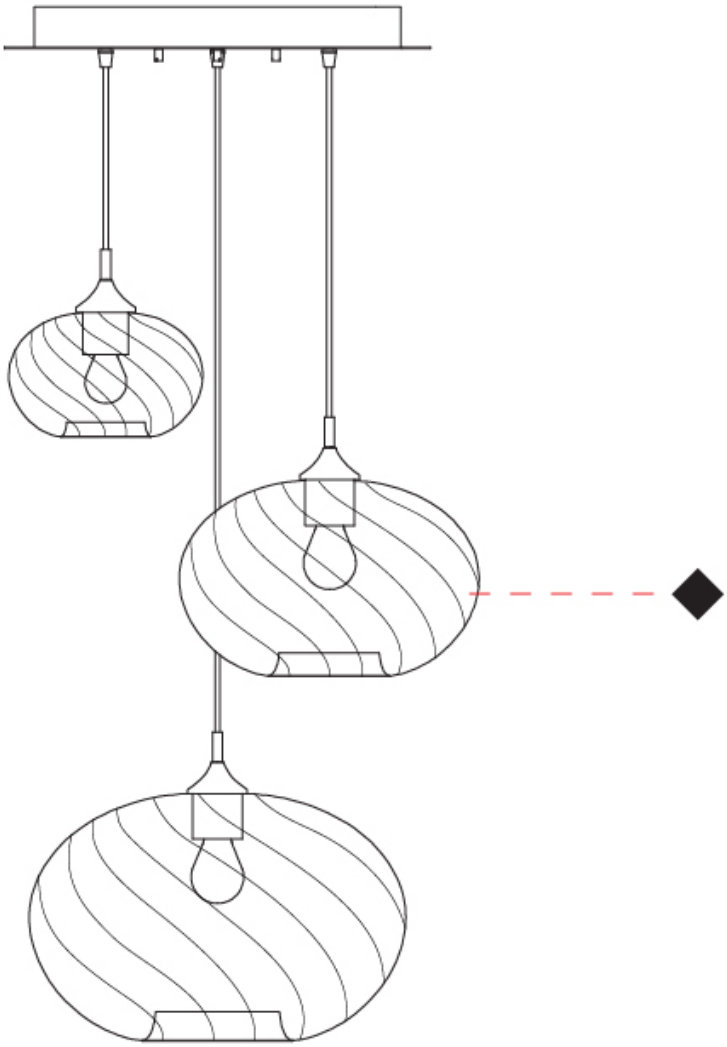

D

Zaneen Group Inc. © 2024, T 1800-388-3382, F 416-247-9319, www.zaneen.com

Available for International specifications by adding 'INT' at the end of the existing Model #. For assistance on 'custom' specifications, contact zteam@zaneen.com.
In a constant effort to supply the best product, we reserve the right to change specifications or materials without notice. The most recent specification sheets are found at zaneen.com

ZANEEN®

PROJECT	
TYPE	
SPECIFIER	
QUANTITY	
DATE	

PARIGI PALLA MONOPOINT SUSPENSION

D141093-

base number | Finish Options

1.To build a product code in our configurator select the specify button on the base model # product page
2. To build a manual product code on this datasheet choose from the options listed below in blue font and add the suffix to the base model #

GENERAL

Series: Parigi
Subseries: Parigi Palla Monopoint
Brand: Cangini & Tucci
Division: Design
Mounting Type: Suspension
Mounting Location: Ceiling
Subcategory: Pendant

PHYSICAL

Shape: Sphere
Diameter (mm): 160
Diameter (in): 6 5/16
Height (mm): 160
Height (in): 6 5/16
Max. Overall Height (mm): 1660
Max. Overall Height (in): 65 3/8
Light Distribution: Omnidirectional
Weight (kg): 0.49
Weight (lbs): 1.08
Fixture Finish: AMB / GRN / PNK / RUB / SKB / SMK / TOB / TRA
Holder Finish: CHR
Fixture Material: Glass / Metal
Cable Details: 1500mm Cable

ELECTRICAL

Number of Lamps: 1
Lamp Type: LED Retrofit
Bulb Included: Bulb Not Included
Max. Wattage Per Lamp (W): 4
Lamp Base: E12
Input Voltage (V): 120

LED

OPTICAL

RATINGS AND CERTIFICATIONS

Certified By: Certified for North American Standards
IP rating: IP20

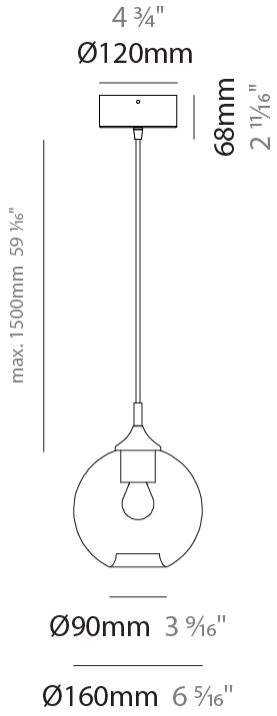

D

Zaneen Group Inc. © 2024, T 1800-388-3382, F 416-247-9319, www.zaneen.com

Available for International specifications by adding 'INT' at the end of the existing Model #. For assistance on 'custom' specifications, contact zteam@zaneen.com.
In a constant effort to supply the best product, we reserve the right to change specifications or materials without notice. The most recent specification sheets are found at zaneen.com

ZANEEN®

PROJECT	
TYPE	
SPECIFIER	
QUANTITY	
DATE	

PARIGI PALLA MONOPOINT SUSPENSION

D141093-

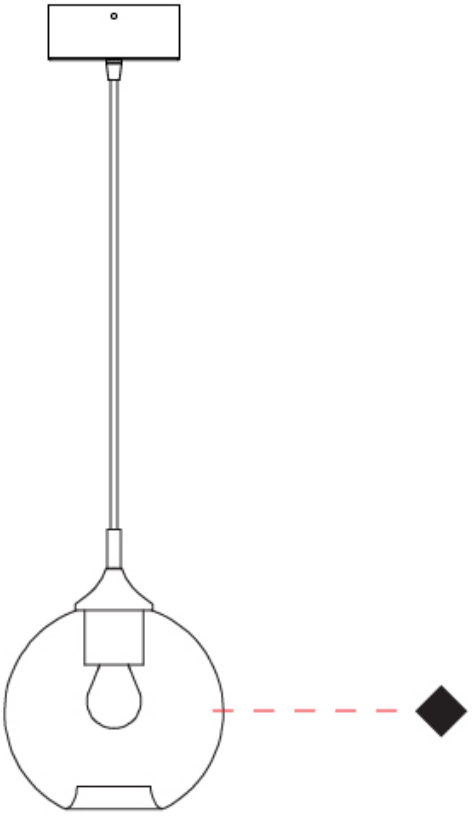

D

Zaneen Group Inc. © 2024, T 1800-388-3382, F 416-247-9319, www.zaneen.com

Available for International specifications by adding 'INT' at the end of the existing Model #. For assistance on 'custom' specifications, contact zteam@zaneen.com.
In a constant effort to supply the best product, we reserve the right to change specifications or materials without notice. The most recent specification sheets are found at zaneen.com

ZANEEN®

PROJECT	
TYPE	
SPECIFIER	
QUANTITY	
DATE	

PARIGI PALLA MONOPOINT SUSPENSION

D141094-

base number — Finish Options

1.To build a product code in our configurator select the specify button on the base model # product page
2. To build a manual product code on this datasheet choose from the options listed below in blue font and add the suffix to the base model #

GENERAL

Series: Parigi
Subseries: Parigi Palla Monopoint
Brand: Cangini & Tucci
Division: Design
Mounting Type: Suspension
Mounting Location: Ceiling
Subcategory: Pendant

PHYSICAL

Shape: Sphere
Diameter (mm): 220
Diameter (in): 8 11/16
Height (mm): 220
Height (in): 8 11/16
Max. Overall Height (mm): 1720
Max. Overall Height (in): 67 11/16
Light Distribution: Omnidirectional
Weight (kg): 1.20
Weight (lbs): 2.65
Fixture Finish: AMB / GRN / PNK / RUB / SKB / SMK / TOB / TRA
Holder Finish: CHR
Fixture Material: Glass / Metal
Cable Details: 1500mm Cable

ELECTRICAL

Number of Lamps: 1
Lamp Type: LED Retrofit
Bulb Included: Bulb Not Included
Max. Wattage Per Lamp (W): 8
Lamp Base: E26
Input Voltage (V): 120
Upon Request: 277Vac / GU24

LED

OPTICAL

RATINGS AND CERTIFICATIONS

Certified By: Certified for North American Standards
IP rating: IP20

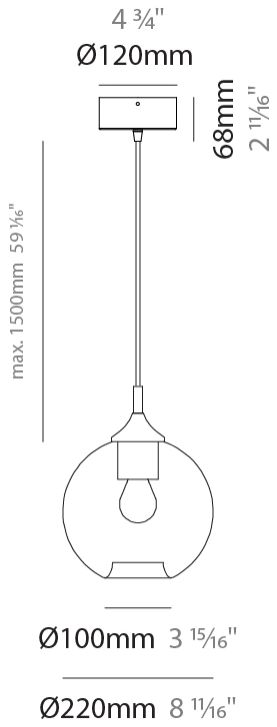

D

Zaneen Group Inc. © 2024, T 1800-388-3382, F 416-247-9319, www.zaneen.com

Available for International specifications by adding 'INT' at the end of the existing Model #. For assistance on 'custom' specifications, contact zteam@zaneen.com.
In a constant effort to supply the best product, we reserve the right to change specifications or materials without notice. The most recent specification sheets are found at zaneen.com

ZANEEN®

PROJECT	
TYPE	
SPECIFIER	
QUANTITY	
DATE	

PARIGI PALLA MONOPOINT SUSPENSION

D141094-

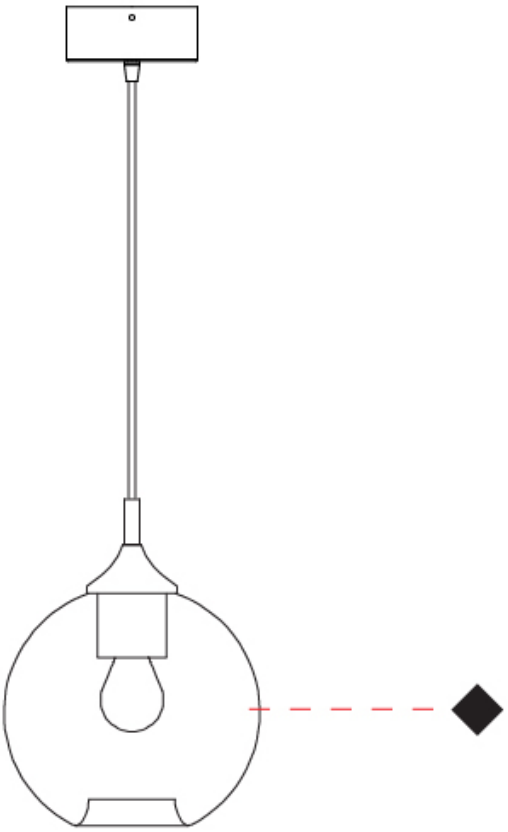

D

Zaneen Group Inc. © 2024, T 1800-388-3382, F 416-247-9319, www.zaneen.com

Available for International specifications by adding 'INT' at the end of the existing Model #. For assistance on 'custom' specifications, contact zteam@zaneen.com.
In a constant effort to supply the best product, we reserve the right to change specifications or materials without notice. The most recent specification sheets are found at zaneen.com

ZANEEN®

PROJECT	
TYPE	
SPECIFIER	
QUANTITY	
DATE	

PARIGI PALLA MONOPOINT SUSPENSION

D141095-

base number — Finish Options

1.To build a product code in our configurator select the specify button on the base model # product page
2. To build a manual product code on this datasheet choose from the options listed below in blue font and add the suffix to the base model #

GENERAL

Series: Parigi
Subseries: Parigi Palla Monopoint
Brand: Cangini & Tucci
Division: Design
Mounting Type: Suspension
Mounting Location: Ceiling
Subcategory: Pendant

PHYSICAL

Shape: Sphere
Diameter (mm): 280
Diameter (in): 11
Height (mm): 280
Height (in): 11
Max. Overall Height (mm): 1780
Max. Overall Height (in): 70 1/16
Light Distribution: Omnidirectional
Weight (kg): 1.50
Weight (lbs): 3.31
Fixture Finish: AMB / GRN / PNK / RUB / SKB / SMK / TOB / TRA
Holder Finish: CHR
Fixture Material: Glass / Metal
Cable Details: 1500mm Cable

ELECTRICAL

Number of Lamps: 1
Lamp Type: LED Retrofit
Bulb Included: Bulb Not Included
Max. Wattage Per Lamp (W): 8
Lamp Base: E26
Input Voltage (V): 120
Upon Request: 277Vac / GU24

LED

OPTICAL

RATINGS AND CERTIFICATIONS

Certified By: Certified for North American Standards
IP rating: IP20

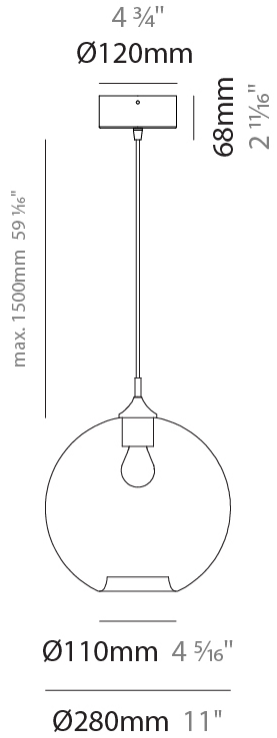

D

Zaneen Group Inc. © 2024, T 1800-388-3382, F 416-247-9319, www.zaneen.com
Available for International specifications by adding 'INT' at the end of the existing Model #. For assistance on 'custom' specifications, contact zteam@zaneen.com.
In a constant effort to supply the best product, we reserve the right to change specifications or materials without notice. The most recent specification sheets are found at zaneen.com

ZANEEN®

PROJECT	
TYPE	
SPECIFIER	
QUANTITY	
DATE	

PARIGI PALLA MONOPOINT SUSPENSION

D141095-

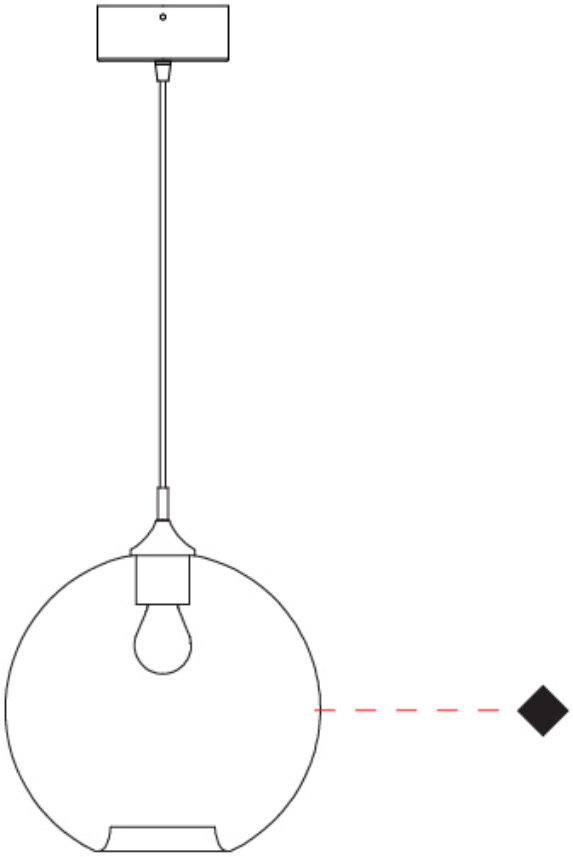

D

Zaneen Group Inc. © 2024, T 1800-388-3382, F 416-247-9319, www.zaneen.com

Available for International specifications by adding 'INT' at the end of the existing Model #. For assistance on 'custom' specifications, contact zteam@zaneen.com.
In a constant effort to supply the best product, we reserve the right to change specifications or materials without notice. The most recent specification sheets are found at zaneen.com

ZANEEN®

PROJECT	
TYPE	
SPECIFIER	
QUANTITY	
DATE	

PARIGI PALLA MONOPOINT SUSPENSION

D141096-

base number | Finish Options

1.To build a product code in our configurator select the specify button on the base model # product page
2. To build a manual product code on this datasheet choose from the options listed below in blue font and add the suffix to the base model #

GENERAL

Series: Parigi
Subseries: Parigi Palla Monopoint
Brand: Cangini & Tucci
Division: Design
Mounting Type: Suspension
Mounting Location: Ceiling
Subcategory: Pendant

PHYSICAL

Shape: Sphere
Diameter (mm): 380
Diameter (in): 14 15/16
Height (mm): 380
Height (in): 14 15/16
Max. Overall Height (mm): 1880
Max. Overall Height (in): 74
Light Distribution: Omnidirectional
Weight (kg): 2.40
Weight (lbs): 5.29
Fixture Finish: AMB / GRN / PNK / RUB / SKB / SMK / TOB / TRA
Holder Finish: CHR
Fixture Material: Glass / Metal
Cable Details: 1500mm Cable

ELECTRICAL

Number of Lamps: 1
Lamp Type: LED Retrofit
Bulb Included: Bulb Not Included
Max. Wattage Per Lamp (W): 8
Lamp Base: E26
Input Voltage (V): 120
Upon Request: 277Vac / GU24

LED

OPTICAL

RATINGS AND CERTIFICATIONS

Certified By: Certified for North American Standards
IP rating: IP20

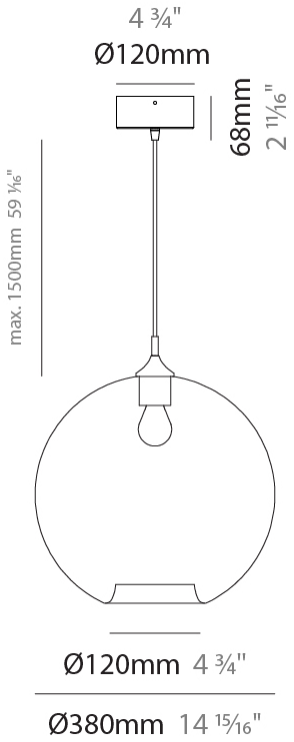

D

Zaneen Group Inc. © 2024, T 1800-388-3382, F 416-247-9319, www.zaneen.com
Available for International specifications by adding 'INT' at the end of the existing Model #. For assistance on 'custom' specifications, contact zteam@zaneen.com.
In a constant effort to supply the best product, we reserve the right to change specifications or materials without notice. The most recent specification sheets are found at zaneen.com

ZANEEN®

PROJECT	
TYPE	
SPECIFIER	
QUANTITY	
DATE	

PARIGI PALLA MONOPOINT SUSPENSION

D141096-

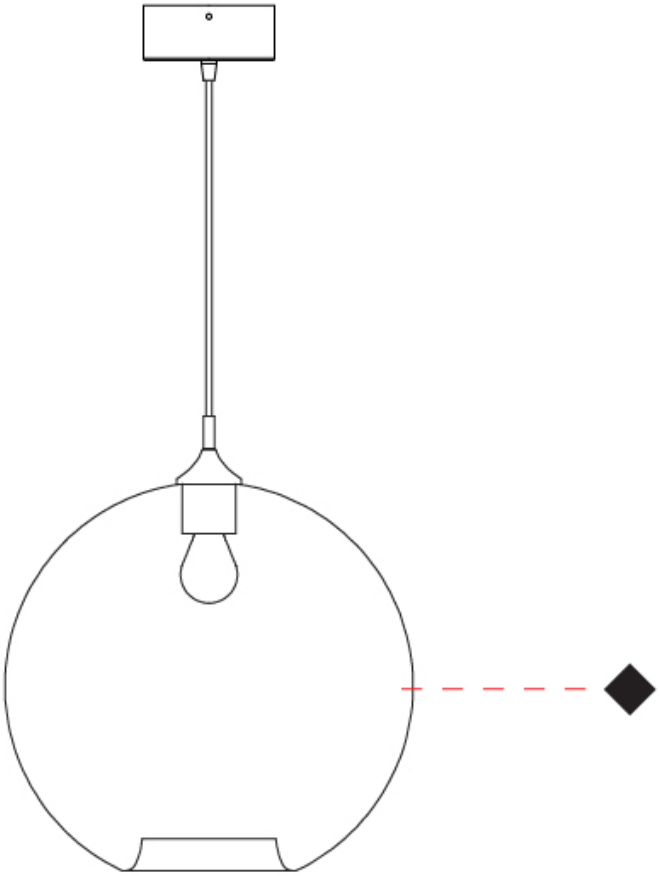

D

Zaneen Group Inc. © 2024, T 1800-388-3382, F 416-247-9319, www.zaneen.com

Available for International specifications by adding 'INT' at the end of the existing Model #. For assistance on 'custom' specifications, contact zteam@zaneen.com.
In a constant effort to supply the best product, we reserve the right to change specifications or materials without notice. The most recent specification sheets are found at zaneen.com

ZANEEN®

PROJECT	
TYPE	
SPECIFIER	
QUANTITY	
DATE	

PARIGI PALLA 3 LIGHT CLUSTER SUSPENSION

D141101-

base number — Finish Options

1.To build a product code in our configurator select the specify button on the base model # product page
2. To build a manual product code on this datasheet choose from the options listed below in blue font and add the suffix to the base model #

GENERAL

Series: Parigi
Subseries: Parigi Palla 3 Light Cluster
Brand: Cangini & Tucci
Division: Design
Mounting Type: Suspension
Mounting Location: Ceiling
Subcategory: Pendant

PHYSICAL

Shape: Sphere
Diameter (mm): 430
Diameter (in): 16 15/16
Max. Overall Height (mm): 1500
Max. Overall Height (in): 59 1/16
Light Distribution: Omnidirectional
Weight (kg): 6.94
Weight (lbs): 15.30
Fixture Finish: AMB / GRN / PNK / RUB / SKB / SMK / TOB / TRA
Holder Finish: PSS
Fixture Material: Glass / Metal
Cable Details: 1500mm Cable

ELECTRICAL

Number of Lamps: 3
Lamp Type: LED Retrofit
Bulb Included: Bulb Not Included
Total Output Wattage (W): 20
Max. Wattage Per Lamp (W): 8 + 4
Lamp Base: E26 + E12
Input Voltage (V): 120

LED

OPTICAL

RATINGS AND CERTIFICATIONS

Certified By: Certified for North American Standards
IP rating: IP20

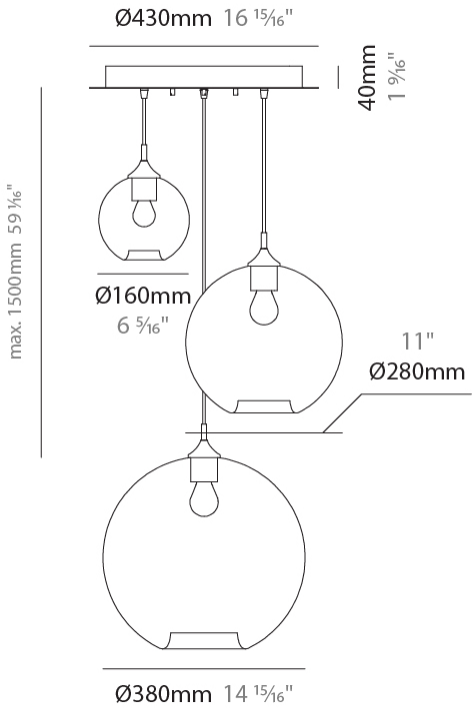

D

Zaneen Group Inc. © 2024, T 1800-388-3382, F 416-247-9319, www.zaneen.com

Available for International specifications by adding 'INT' at the end of the existing Model #. For assistance on 'custom' specifications, contact zteam@zaneen.com.
In a constant effort to supply the best product, we reserve the right to change specifications or materials without notice. The most recent specification sheets are found at zaneen.com

ZANEEN®

PROJECT	
TYPE	
SPECIFIER	
QUANTITY	
DATE	

PARIGI PALLA 3 LIGHT CLUSTER SUSPENSION

D141101-

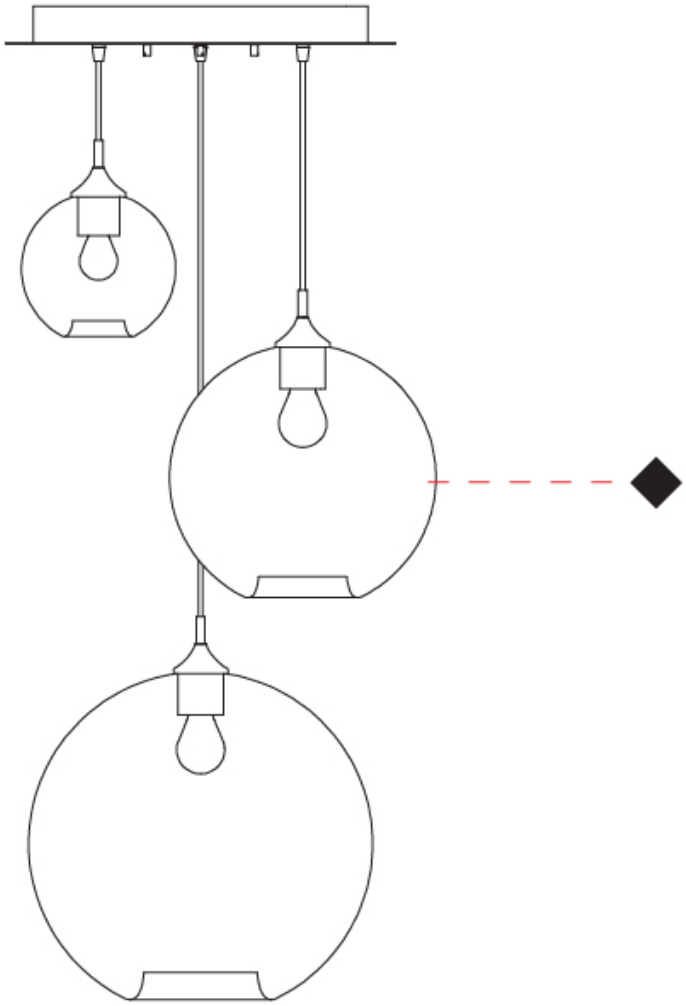

D

Zaneen Group Inc. © 2024, T 1800-388-3382, F 416-247-9319, www.zaneen.com

Available for International specifications by adding 'INT' at the end of the existing Model #. For assistance on 'custom' specifications, contact zteam@zaneen.com.
In a constant effort to supply the best product, we reserve the right to change specifications or materials without notice. The most recent specification sheets are found at zaneen.com

ZANEEN®

PROJECT	
TYPE	
SPECIFIER	
QUANTITY	
DATE	

PARIGI PALLA MONOPOINT SUSPENSION

D141102-

base number — Finish Options

1.To build a product code in our configurator select the specify button on the base model # product page
2. To build a manual product code on this datasheet choose from the options listed below in blue font and add the suffix to the base model #

GENERAL

Series: Parigi
Subseries: Parigi Palla Monopoint
Brand: Cangini & Tucci
Division: Design
Mounting Type: Suspension
Mounting Location: Ceiling
Subcategory: Pendant

PHYSICAL

Shape: Sphere
Diameter (mm): 160
Diameter (in): 6 5/16
Height (mm): 160
Height (in): 6 5/16
Max. Overall Height (mm): 1660
Max. Overall Height (in): 65 3/8
Light Distribution: Omnidirectional
Weight (kg): 0.49
Weight (lbs): 1.1
Fixture Finish: AMB / GRN / PNK / RUB / SKB / SMK / TOB / TRA
Holder Finish: CHR
Fixture Material: Glass / Metal
Cable Details: 1500mm Cable

ELECTRICAL

Number of Lamps: 1
Lamp Type: LED Retrofit
Bulb Included: Bulb Not Included
Max. Wattage Per Lamp (W): 4
Lamp Base: E12
Input Voltage (V): 120

LED

OPTICAL

RATINGS AND CERTIFICATIONS

Certified By: Certified for North American Standards
IP rating: IP20

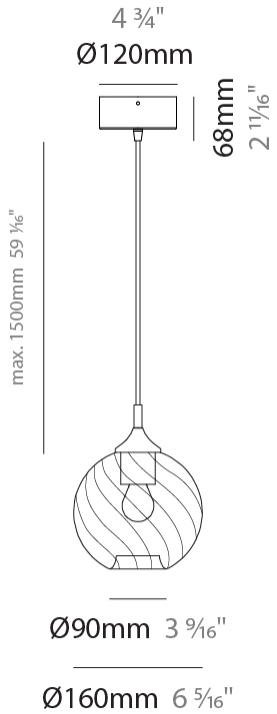

D

Zaneen Group Inc. © 2024, T 1800-388-3382, F 416-247-9319, www.zaneen.com

Available for International specifications by adding 'INT' at the end of the existing Model #. For assistance on 'custom' specifications, contact zteam@zaneen.com.
In a constant effort to supply the best product, we reserve the right to change specifications or materials without notice. The most recent specification sheets are found at zaneen.com

ZANEEN®

PROJECT	
TYPE	
SPECIFIER	
QUANTITY	
DATE	

PARIGI PALLA MONOPOINT SUSPENSION

D141102-

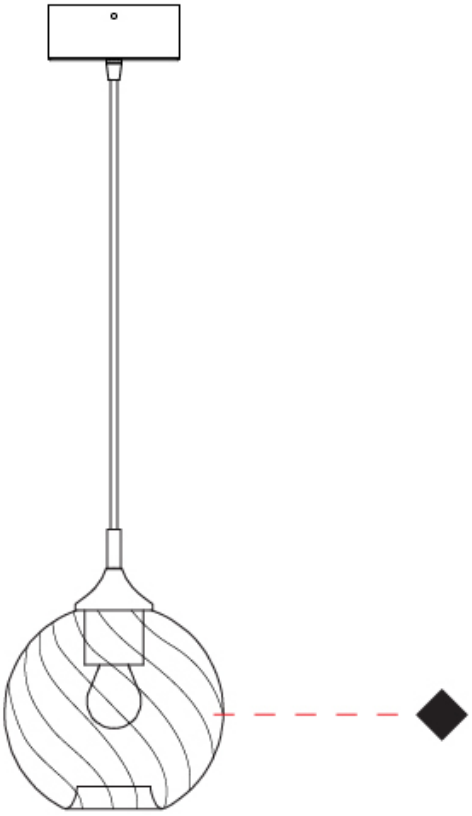

D

Zaneen Group Inc. © 2024, T 1800-388-3382, F 416-247-9319, www.zaneen.com

Available for International specifications by adding 'INT' at the end of the existing Model #. For assistance on 'custom' specifications, contact zteam@zaneen.com.
In a constant effort to supply the best product, we reserve the right to change specifications or materials without notice. The most recent specification sheets are found at zaneen.com

ZANEEN®

PROJECT	
TYPE	
SPECIFIER	
QUANTITY	
DATE	

PARIGI PALLA MONOPOINT SUSPENSION

D141103-

base number — Finish Options

1.To build a product code in our configurator select the specify button on the base model # product page
2. To build a manual product code on this datasheet choose from the options listed below in blue font and add the suffix to the base model #

GENERAL

Series: Parigi
Subseries: Parigi Palla Monopoint
Brand: Cangini & Tucci
Division: Design
Mounting Type: Suspension
Mounting Location: Ceiling
Subcategory: Pendant

PHYSICAL

Shape: Sphere
Diameter (mm): 220
Diameter (in): 8 11/16
Height (mm): 220
Height (in): 8 11/16
Max. Overall Height (mm): 1720
Max. Overall Height (in): 67 11/16
Light Distribution: Omnidirectional
Weight (kg): 1.20
Weight (lbs): 2.65
Fixture Finish: AMB / GRN / PNK / RUB / SKB / SMK / TOB / TRA
Holder Finish: CHR
Fixture Material: Glass / Metal
Cable Details: 1500mm Cable

ELECTRICAL

Number of Lamps: 1
Lamp Type: LED Retrofit
Bulb Included: Bulb Not Included
Max. Wattage Per Lamp (W): 8
Lamp Base: E26
Input Voltage (V): 120
Upon Request: 277Vac / GU24

LED

OPTICAL

RATINGS AND CERTIFICATIONS

Certified By: Certified for North American Standards
IP rating: IP20

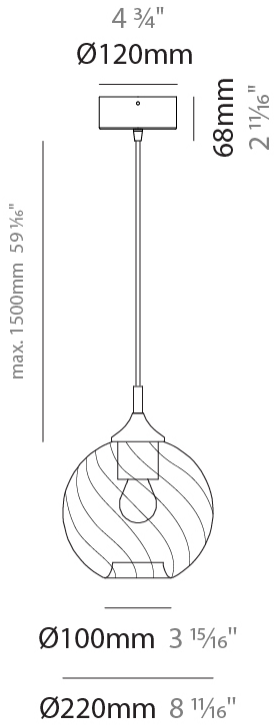

D

Zaneen Group Inc. © 2024, T 1800-388-3382, F 416-247-9319, www.zaneen.com

Available for International specifications by adding 'INT' at the end of the existing Model #. For assistance on 'custom' specifications, contact zteam@zaneen.com.
In a constant effort to supply the best product, we reserve the right to change specifications or materials without notice. The most recent specification sheets are found at zaneen.com

ZANEEN®

PROJECT	
TYPE	
SPECIFIER	
QUANTITY	
DATE	

PARIGI PALLA MONOPOINT SUSPENSION

D141103-

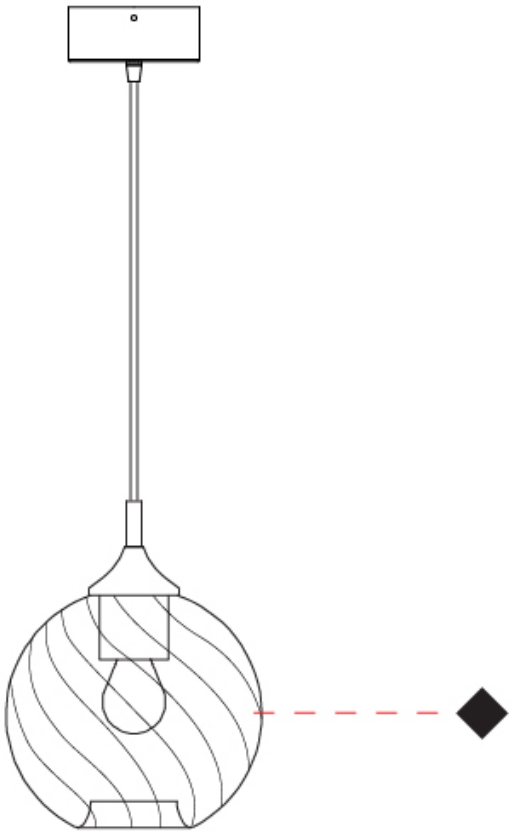

D

Zaneen Group Inc. © 2024, T 1800-388-3382, F 416-247-9319, www.zaneen.com

Available for International specifications by adding 'INT' at the end of the existing Model #. For assistance on 'custom' specifications, contact zteam@zaneen.com.
In a constant effort to supply the best product, we reserve the right to change specifications or materials without notice. The most recent specification sheets are found at zaneen.com

ZANEEN®

PROJECT	
TYPE	
SPECIFIER	
QUANTITY	
DATE	

PARIGI PALLA MONOPOINT SUSPENSION

D141104-

base number — Finish Options

1.To build a product code in our configurator select the specify button on the base model # product page
2. To build a manual product code on this datasheet choose from the options listed below in blue font and add the suffix to the base model #

GENERAL

Series: Parigi
Subseries: Parigi Palla Monopoint
Brand: Cangini & Tucci
Division: Design
Mounting Type: Suspension
Mounting Location: Ceiling
Subcategory: Pendant

PHYSICAL

Shape: Sphere
Diameter (mm): 280
Diameter (in): 11
Height (mm): 280
Height (in): 11
Max. Overall Height (mm): 1780
Max. Overall Height (in): 70 1/16
Light Distribution: Omnidirectional
Weight (kg): 1.50
Weight (lbs): 3.31
Fixture Finish: AMB / GRN / PNK / RUB / SKB / SMK / TOB / TRA
Holder Finish: CHR
Fixture Material: Glass / Metal
Cable Details: 1500mm Cable

ELECTRICAL

Number of Lamps: 1
Lamp Type: LED Retrofit
Bulb Included: Bulb Not Included
Max. Wattage Per Lamp (W): 8
Lamp Base: E26
Input Voltage (V): 120
Upon Request: 277Vac / GU24

LED

OPTICAL

RATINGS AND CERTIFICATIONS

Certified By: Certified for North American Standards
IP rating: IP20

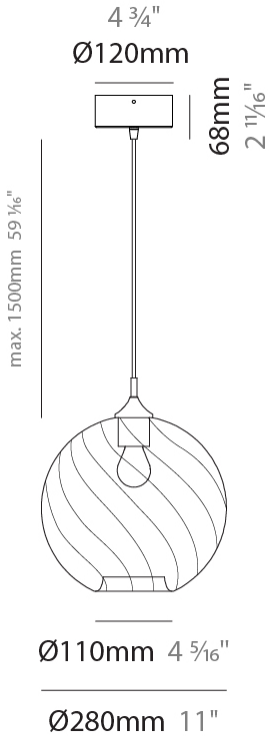

D

Zaneen Group Inc. © 2024, T 1800-388-3382, F 416-247-9319, www.zaneen.com

Available for International specifications by adding 'INT' at the end of the existing Model #. For assistance on 'custom' specifications, contact zteam@zaneen.com.
In a constant effort to supply the best product, we reserve the right to change specifications or materials without notice. The most recent specification sheets are found at zaneen.com

ZANEEN®

PROJECT	
TYPE	
SPECIFIER	
QUANTITY	
DATE	

PARIGI PALLA MONOPOINT SUSPENSION

D141104-

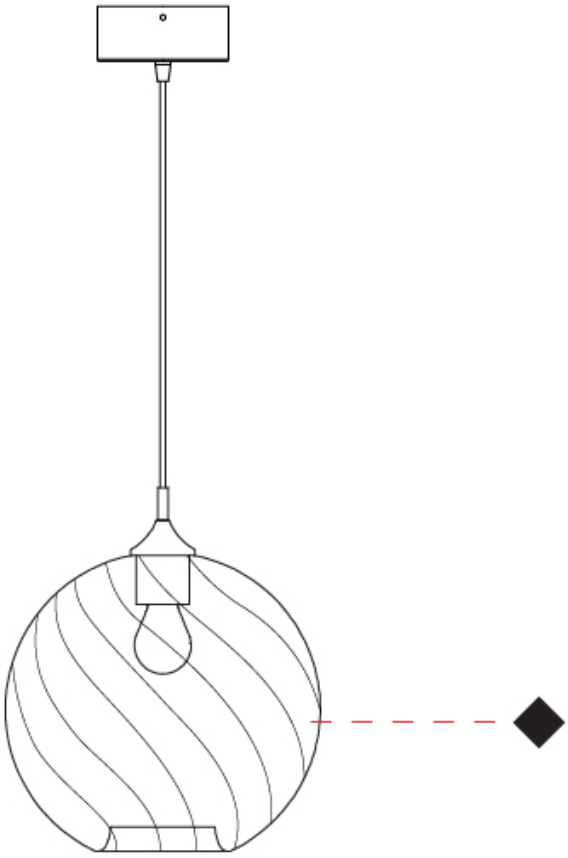

D

Zaneen Group Inc. © 2024, T 1800-388-3382, F 416-247-9319, www.zaneen.com

Available for International specifications by adding 'INT' at the end of the existing Model #. For assistance on 'custom' specifications, contact zteam@zaneen.com.
In a constant effort to supply the best product, we reserve the right to change specifications or materials without notice. The most recent specification sheets are found at zaneen.com

ZANEEN®

PROJECT	
TYPE	
SPECIFIER	
QUANTITY	
DATE	

PARIGI PALLA MONOPOINT SUSPENSION

D141105-

base number — Finish Options

1.To build a product code in our configurator select the specify button on the base model # product page
2. To build a manual product code on this datasheet choose from the options listed below in blue font and add the suffix to the base model #

GENERAL

Series: Parigi
Subseries: Parigi Palla Monopoint
Brand: Cangini & Tucci
Division: Design
Mounting Type: Suspension
Mounting Location: Ceiling
Subcategory: Pendant

PHYSICAL

Shape: Sphere
Diameter (mm): 380
Diameter (in): 14 15/16
Height (mm): 380
Height (in): 14 15/16
Max. Overall Height (mm): 1880
Max. Overall Height (in): 74
Light Distribution: Omnidirectional
Weight (kg): 2.40
Weight (lbs): 5.29
Fixture Finish: AMB / GRN / PNK / RUB / SKB / SMK / TOB / TRA
Holder Finish: CHR
Fixture Material: Glass / Metal
Cable Details: 1500mm Cable

ELECTRICAL

Number of Lamps: 1
Lamp Type: LED Retrofit
Bulb Included: Bulb Not Included
Max. Wattage Per Lamp (W): 8
Lamp Base: E26
Input Voltage (V): 120
Upon Request: 277Vac / GU24

LED

OPTICAL

RATINGS AND CERTIFICATIONS

Certified By: Certified for North American Standards
IP rating: IP20

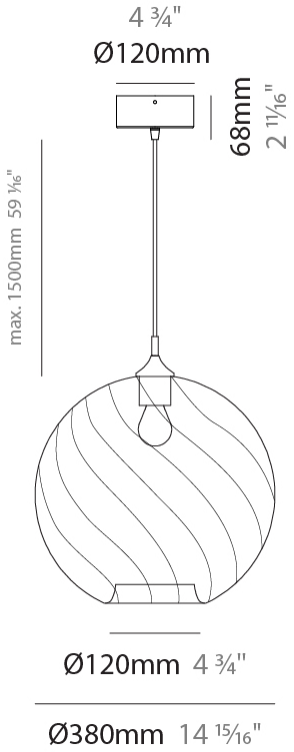

D

Zaneen Group Inc. © 2024, T 1800-388-3382, F 416-247-9319, www.zaneen.com

Available for International specifications by adding 'INT' at the end of the existing Model #. For assistance on 'custom' specifications, contact zteam@zaneen.com.
In a constant effort to supply the best product, we reserve the right to change specifications or materials without notice. The most recent specification sheets are found at zaneen.com

ZANEEN®

PROJECT	
TYPE	
SPECIFIER	
QUANTITY	
DATE	

PARIGI PALLA MONOPOINT SUSPENSION

D141105-

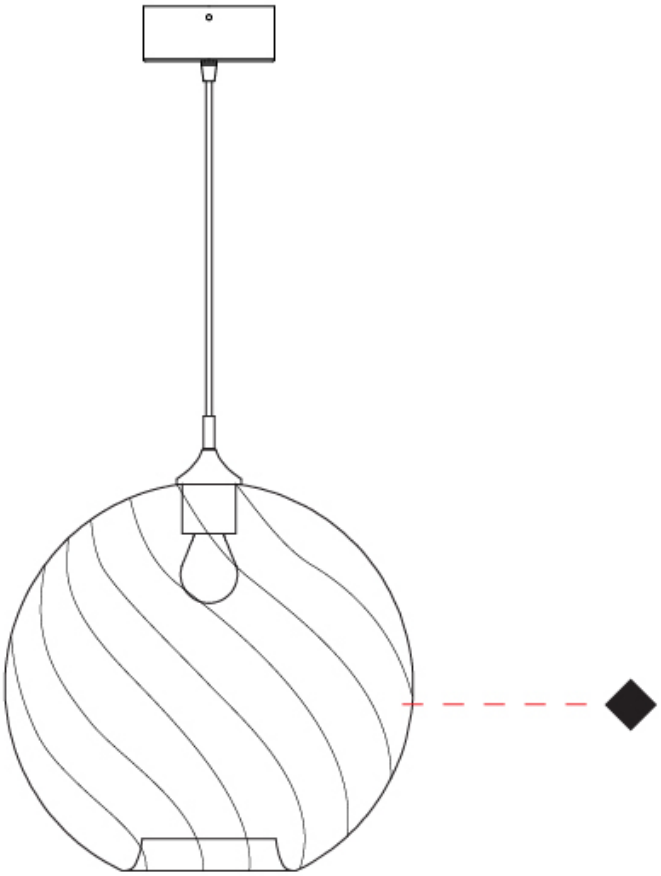

D

Zaneen Group Inc. © 2024, T 1800-388-3382, F 416-247-9319, www.zaneen.com

Available for International specifications by adding 'INT' at the end of the existing Model #. For assistance on 'custom' specifications, contact zteam@zaneen.com.
In a constant effort to supply the best product, we reserve the right to change specifications or materials without notice. The most recent specification sheets are found at zaneen.com

ZANEEN®

PROJECT	
TYPE	
SPECIFIER	
QUANTITY	
DATE	

PARIGI PALLA 3 LIGHT CLUSTER SUSPENSION

D141110-

base number | Finish Options

1.To build a product code in our configurator select the specify button on the base model # product page
2. To build a manual product code on this datasheet choose from the options listed below in blue font and add the suffix to the base model #

GENERAL

Series: Parigi
Subseries: Parigi Palla 3 Light Cluster
Brand: Cangini & Tucci
Division: Design
Mounting Type: Suspension
Mounting Location: Ceiling
Subcategory: Pendant

PHYSICAL

Shape: Sphere
Diameter (mm): 430
Diameter (in): 16 15/16
Max. Overall Height (mm): 1500
Max. Overall Height (in): 59 1/16
Light Distribution: Omnidirectional
Weight (kg): 6.94
Weight (lbs): 15.30
Fixture Finish: AMB / GRN / PNK / RUB / SKB / SMK / TOB / TRA
Holder Finish: PSS
Fixture Material: Glass / Metal
Cable Details: 1500mm Cable

ELECTRICAL

Number of Lamps: 3
Lamp Type: LED Retrofit
Bulb Included: Bulb Not Included
Total Output Wattage (W): 20
Max. Wattage Per Lamp (W): 8 + 4
Lamp Base: E26 + E12
Input Voltage (V): 120

LED

OPTICAL

RATINGS AND CERTIFICATIONS

Certified By: Certified for North American Standards
IP rating: IP20

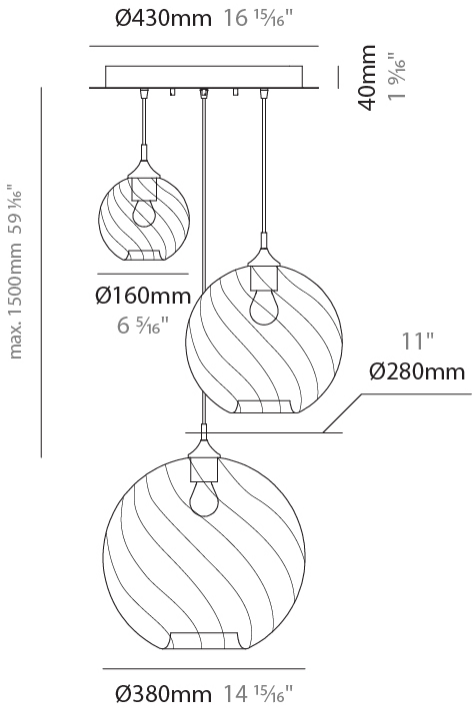

D

Zaneen Group Inc. © 2024, T 1800-388-3382, F 416-247-9319, www.zaneen.com

Available for International specifications by adding 'INT' at the end of the existing Model #. For assistance on 'custom' specifications, contact zteam@zaneen.com.
In a constant effort to supply the best product, we reserve the right to change specifications or materials without notice. The most recent specification sheets are found at zaneen.com

ZANEEN®

PROJECT	
TYPE	
SPECIFIER	
QUANTITY	
DATE	

PARIGI PALLA 3 LIGHT CLUSTER SUSPENSION

D141110-

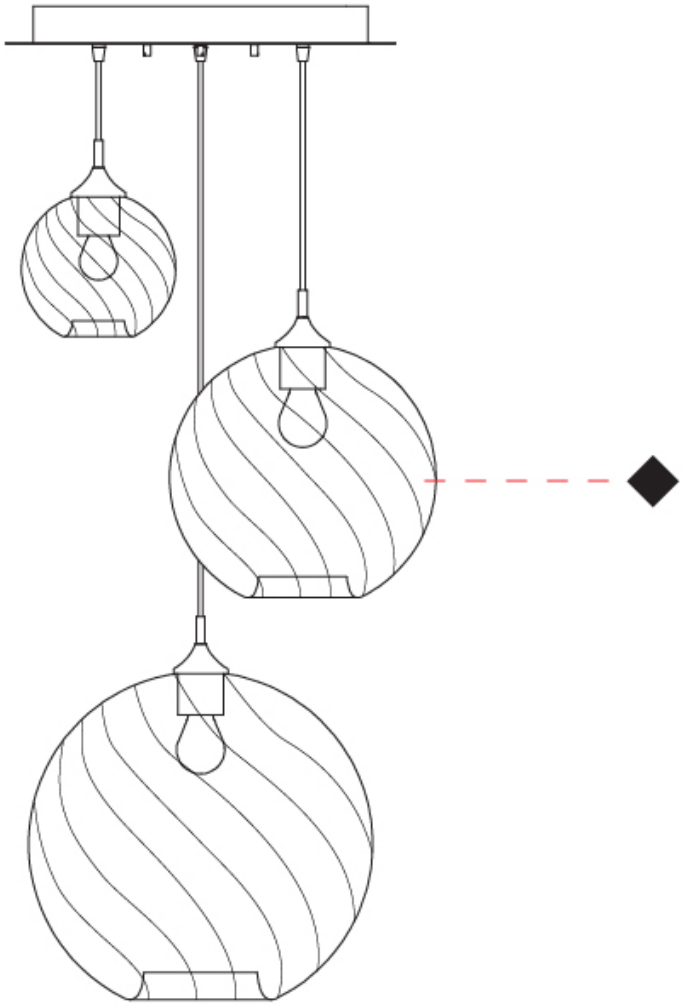

D

Zaneen Group Inc. © 2024, T 1800-388-3382, F 416-247-9319, www.zaneen.com

Available for International specifications by adding 'INT' at the end of the existing Model #. For assistance on 'custom' specifications, contact zteam@zaneen.com.
In a constant effort to supply the best product, we reserve the right to change specifications or materials without notice. The most recent specification sheets are found at zaneen.com

ZANEEN®

PROJECT	
TYPE	
SPECIFIER	
QUANTITY	
DATE	

PARIGI CIPOLLA SURFACE

D143014-

base number — Finish Options

1.To build a product code in our configurator select the specify button on the base model # product page
2. To build a manual product code on this datasheet choose from the options listed below in blue font and add the suffix to the base model #

GENERAL

Series: Parigi
Subseries: Parigi Cipolla
Brand: Cangini & Tucci
Division: Design
Mounting Type: Surface
Mounting Location: Wall
Subcategory: Ambient

PHYSICAL

Shape: Sphere
Length (mm): 150
Length (in): 5 7/8
Height (mm): 230
Depth (mm): 190
Height (in): 9 1/16
Depth (in): 7 1/2
Light Distribution: Omnidirectional
Weight (kg): 0.45
Weight (lbs): 0.99
Fixture Finish: AMB / GRN / PNK / RUB / SKB / SMK / TOB / TRA
Holder Finish: CHR
Fixture Material: Glass / Metal

ELECTRICAL

Number of Lamps: 1
Lamp Type: LED Retrofit
Bulb Included: Bulb Not Included
Max. Wattage Per Lamp (W): 4
Lamp Base: E12
Input Voltage (V): 120

LED

OPTICAL

RATINGS AND CERTIFICATIONS

Certified By: Certified for North American Standards
IP rating: IP20

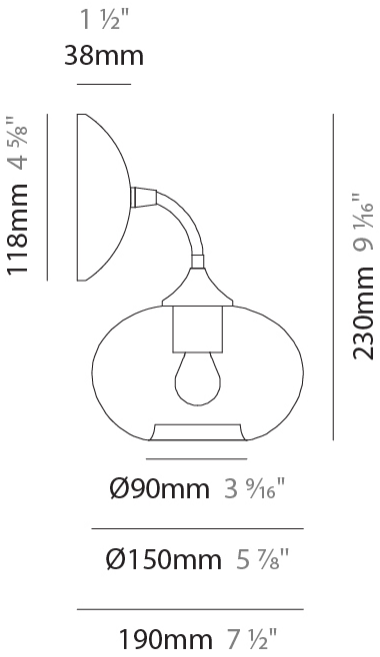

D

Zaneen Group Inc. © 2024, T 1800-388-3382, F 416-247-9319, www.zaneen.com
Available for International specifications by adding 'INT' at the end of the existing Model #. For assistance on 'custom' specifications, contact zteam@zaneen.com.
In a constant effort to supply the best product, we reserve the right to change specifications or materials without notice. The most recent specification sheets are found at zaneen.com

ZANEEN®

PROJECT	
TYPE	
SPECIFIER	
QUANTITY	
DATE	

PARIGI CIPOLLA SURFACE

D143014-

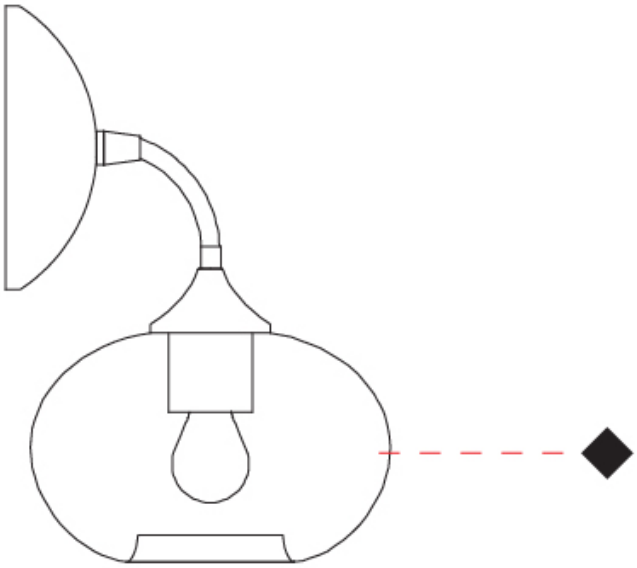

D

Zaneen Group Inc. © 2024, T 1800-388-3382, F 416-247-9319, www.zaneen.com

Available for International specifications by adding 'INT' at the end of the existing Model #. For assistance on 'custom' specifications, contact zteam@zaneen.com.
In a constant effort to supply the best product, we reserve the right to change specifications or materials without notice. The most recent specification sheets are found at zaneen.com

ZANEEN®

PROJECT	
TYPE	
SPECIFIER	
QUANTITY	
DATE	

PARIGI CIPOLLA SURFACE

D143015-

base number — Finish Options

1.To build a product code in our configurator select the specify button on the base model # product page
2. To build a manual product code on this datasheet choose from the options listed below in blue font and add the suffix to the base model #

GENERAL

Series: Parigi
Subseries: Parigi Cipolla
Brand: Cangini & Tucci
Division: Design
Mounting Type: Surface
Mounting Location: Wall
Subcategory: Ambient

PHYSICAL

Shape: Sphere
Length (mm): 150
Length (in): 5 7/8
Height (mm): 230
Depth (mm): 190
Height (in): 9 1/16
Depth (in): 7 1/2
Light Distribution: Omnidirectional
Weight (kg): 0.45
Weight (lbs): 0.99
Fixture Finish: AMB / GRN / PNK / RUB / SKB / SMK / TOB / TRA
Holder Finish: CHR
Fixture Material: Glass / Metal

ELECTRICAL

Number of Lamps: 1
Lamp Type: LED Retrofit
Bulb Included: Bulb Not Included
Max. Wattage Per Lamp (W): 4
Lamp Base: E12
Input Voltage (V): 120

LED

OPTICAL

RATINGS AND CERTIFICATIONS

Certified By: Certified for North American Standards
IP rating: IP20

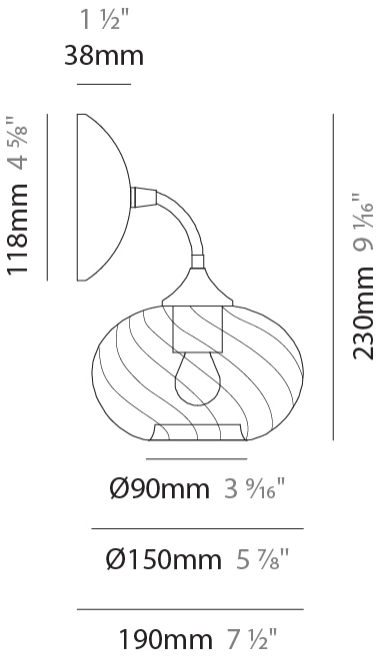

D

Zaneen Group Inc. © 2024, T 1800-388-3382, F 416-247-9319, www.zaneen.com
Available for International specifications by adding 'INT' at the end of the existing Model #. For assistance on 'custom' specifications, contact zteam@zaneen.com.
In a constant effort to supply the best product, we reserve the right to change specifications or materials without notice. The most recent specification sheets are found at zaneen.com

ZANEEN®

PARIGI CIPOLLA SURFACE

PROJECT	
TYPE	
SPECIFIER	
QUANTITY	
DATE	

D143015-

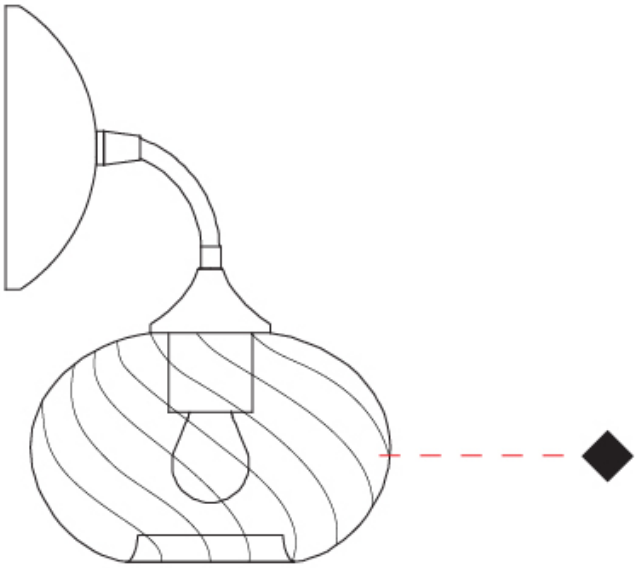

D

Zaneen Group Inc. © 2024, T 1800-388-3382, F 416-247-9319, www.zaneen.com

Available for International specifications by adding 'INT' at the end of the existing Model #. For assistance on 'custom' specifications, contact zteam@zaneen.com.
In a constant effort to supply the best product, we reserve the right to change specifications or materials without notice. The most recent specification sheets are found at zaneen.com

ZANEEN®

PROJECT	
TYPE	
SPECIFIER	
QUANTITY	
DATE	

PARIGI PALLA SURFACE

D143016-

base number — Finish Options

1.To build a product code in our configurator select the specify button on the base model # product page
2. To build a manual product code on this datasheet choose from the options listed below in blue font and add the suffix to the base model #

GENERAL

Series: Parigi
Subseries: Parigi Palla
Brand: Cangini & Tucci
Division: Design
Mounting Type: Surface
Mounting Location: Wall
Subcategory: Ambient

PHYSICAL

Shape: Sphere
Length (mm): 150
Length (in): 5 7/8
Height (mm): 250
Depth (mm): 190
Height (in): 9 13/16
Depth (in): 7 1/2
Light Distribution: Omnidirectional
Weight (kg): 0.49
Weight (lbs): 1.08
Fixture Finish: AMB / GRN / PNK / RUB / SKB / SMK / TOB / TRA
Holder Finish: CHR
Fixture Material: Glass / Metal

ELECTRICAL

Number of Lamps: 1
Lamp Type: LED Retrofit
Bulb Included: Bulb Not Included
Max. Wattage Per Lamp (W): 4
Lamp Base: E12
Input Voltage (V): 120

LED

OPTICAL

RATINGS AND CERTIFICATIONS

Certified By: Certified for North American Standards
IP rating: IP20

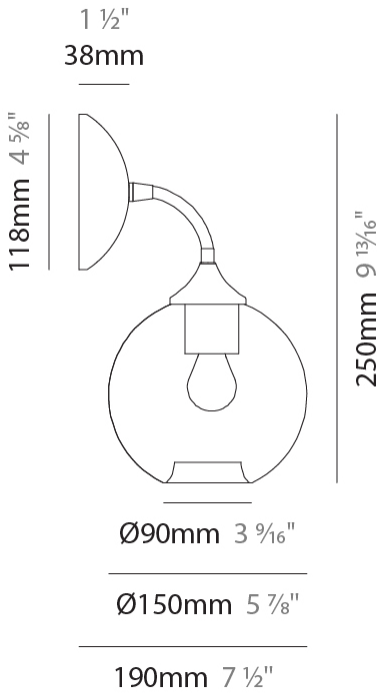

D

Zaneen Group Inc. © 2024, T 1800-388-3382, F 416-247-9319, www.zaneen.com
Available for International specifications by adding 'INT' at the end of the existing Model #. For assistance on 'custom' specifications, contact zteam@zaneen.com.
In a constant effort to supply the best product, we reserve the right to change specifications or materials without notice. The most recent specification sheets are found at zaneen.com

ZANEEN®

PROJECT	
TYPE	
SPECIFIER	
QUANTITY	
DATE	

PARIGI PALLA SURFACE

D143016-

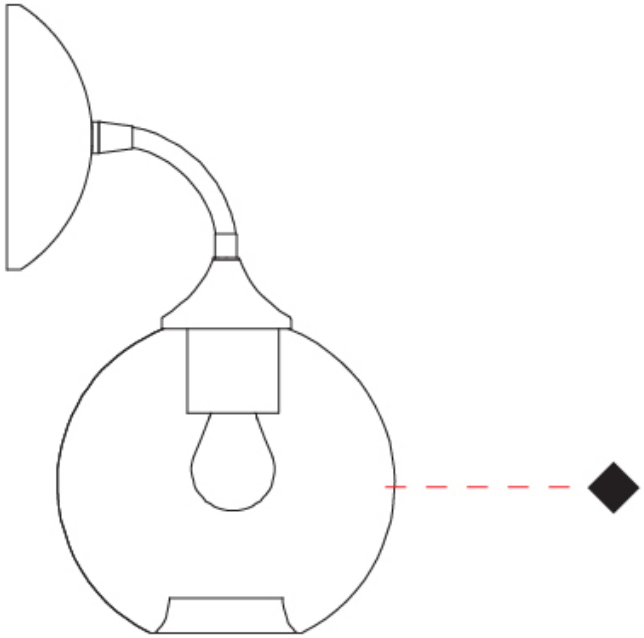

D

Zaneen Group Inc. © 2024, T 1800-388-3382, F 416-247-9319, www.zaneen.com

Available for International specifications by adding 'INT' at the end of the existing Model #. For assistance on 'custom' specifications, contact zteam@zaneen.com.
In a constant effort to supply the best product, we reserve the right to change specifications or materials without notice. The most recent specification sheets are found at zaneen.com

ZANEEN®

PROJECT	
TYPE	
SPECIFIER	
QUANTITY	
DATE	

PARIGI PALLA SURFACE

D143017-

base number — Finish Options

1.To build a product code in our configurator select the specify button on the base model # product page
2. To build a manual product code on this datasheet choose from the options listed below in blue font and add the suffix to the base model #

GENERAL

Series: Parigi
Subseries: Parigi Palla
Brand: Cangini & Tucci
Division: Design
Mounting Type: Surface
Mounting Location: Wall
Subcategory: Ambient

PHYSICAL

Shape: Sphere
Length (mm): 150
Length (in): 5 7/8
Height (mm): 250
Depth (mm): 190
Height (in): 9 13/16
Depth (in): 7 1/2
Light Distribution: Omnidirectional
Weight (kg): 0.49
Weight (lbs): 1.08
Fixture Finish: AMB / GRN / PNK / RUB / SKB / SMK / TOB / TRA
Holder Finish: CHR
Fixture Material: Glass / Metal

ELECTRICAL

Number of Lamps: 1
Lamp Type: LED Retrofit
Bulb Included: Bulb Not Included
Max. Wattage Per Lamp (W): 4
Lamp Base: E12
Input Voltage (V): 120

LED

OPTICAL

RATINGS AND CERTIFICATIONS

Certified By: Certified for North American Standards
IP rating: IP20

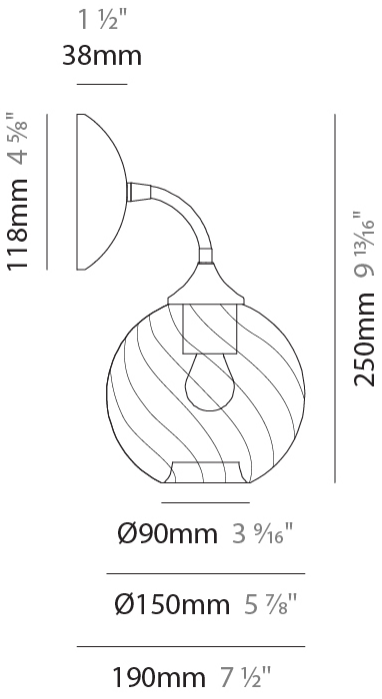

D

Zaneen Group Inc. © 2024, T 1800-388-3382, F 416-247-9319, www.zaneen.com
Available for International specifications by adding 'INT' at the end of the existing Model #. For assistance on 'custom' specifications, contact zteam@zaneen.com.
In a constant effort to supply the best product, we reserve the right to change specifications or materials without notice. The most recent specification sheets are found at zaneen.com

ZANEEN®

PARIGI PALLA SURFACE

PROJECT	
TYPE	
SPECIFIER	
QUANTITY	
DATE	

D143017-

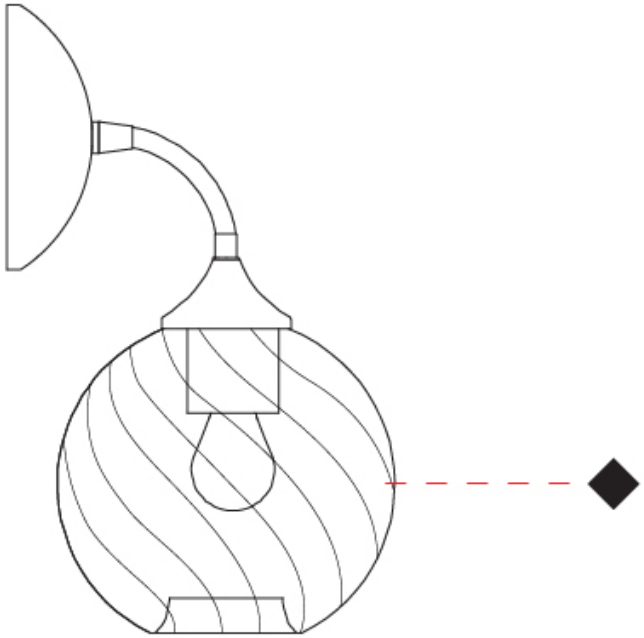

D

Zaneen Group Inc. © 2024, T 1800-388-3382, F 416-247-9319, www.zaneen.com

Available for International specifications by adding 'INT' at the end of the existing Model #. For assistance on 'custom' specifications, contact zteam@zaneen.com.
In a constant effort to supply the best product, we reserve the right to change specifications or materials without notice. The most recent specification sheets are found at zaneen.com

ZANEEN®

PROJECT	
TYPE	
SPECIFIER	
QUANTITY	
DATE	

PARIGI CIPOLLA PORTABLE

D144008-

base number — Finish Options

1.To build a product code in our configurator select the specify button on the base model # product page
2. To build a manual product code on this datasheet choose from the options listed below in blue font and add the suffix to the base model #

GENERAL

Series: Parigi
Subseries: Parigi Cipolla
Brand: Cangini & Tucci
Division: Design
Mounting Type: Portable
Mounting Location: Table
Subcategory: Ambient

PHYSICAL

Shape: Sphere
Diameter (mm): 160
Diameter (in): 6 5/16
Height (mm): 300
Height (in): 11 13/16
Light Distribution: Omnidirectional
Weight (kg): 0.52
Weight (lbs): 1.15
Fixture Finish: AMB / GRN / PNK / RUB / SKB / SMK / TOB / TRA
Holder Finish: CHR
Fixture Material: Glass / Metal

ELECTRICAL

Number of Lamps: 1
Lamp Type: LED Retrofit
Bulb Included: Bulb Not Included
Max. Wattage Per Lamp (W): 4
Lamp Base: E12
Input Voltage (V): 120

LED

OPTICAL

RATINGS AND CERTIFICATIONS

Certified By: Certified for North American Standards
IP rating: IP20

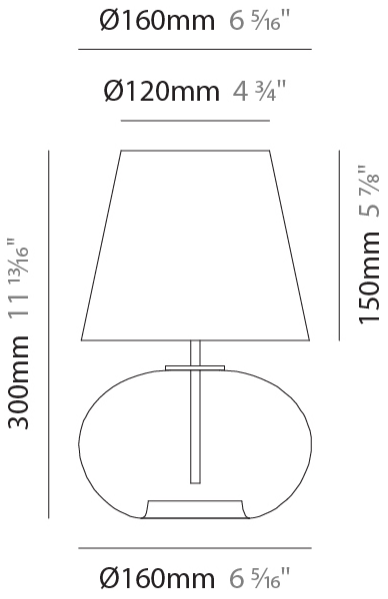

D

Zaneen Group Inc. © 2024, T 1800-388-3382, F 416-247-9319, www.zaneen.com

Available for International specifications by adding 'INT' at the end of the existing Model #. For assistance on 'custom' specifications, contact zteam@zaneen.com.
In a constant effort to supply the best product, we reserve the right to change specifications or materials without notice. The most recent specification sheets are found at zaneen.com

ZANEEN®

PROJECT	
TYPE	
SPECIFIER	
QUANTITY	
DATE	

PARIGI CIPOLLA PORTABLE

D144008-

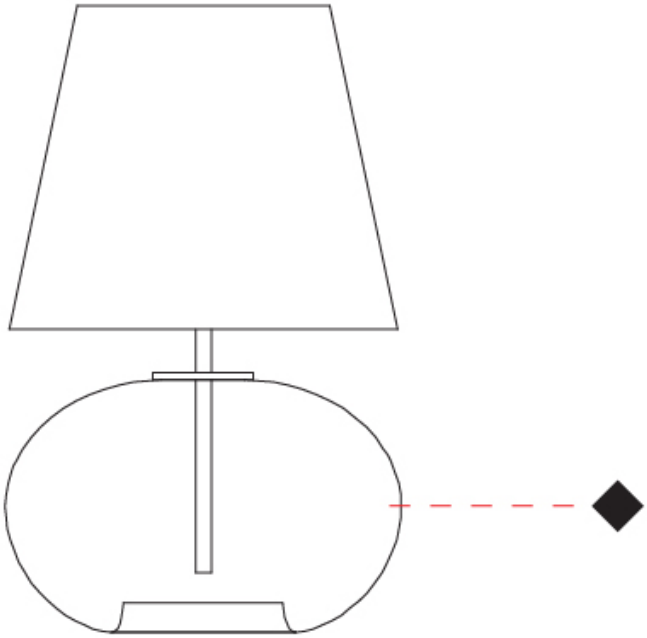

D

Zaneen Group Inc. © 2024, T 1800-388-3382, F 416-247-9319, www.zaneen.com

Available for International specifications by adding 'INT' at the end of the existing Model #. For assistance on 'custom' specifications, contact zteam@zaneen.com.
In a constant effort to supply the best product, we reserve the right to change specifications or materials without notice. The most recent specification sheets are found at zaneen.com

ZANEEN®

PROJECT	
TYPE	
SPECIFIER	
QUANTITY	
DATE	

PARIGI CIPOLLA PORTABLE

D144009-

base number — Finish Options

1.To build a product code in our configurator select the specify button on the base model # product page
2. To build a manual product code on this datasheet choose from the options listed below in blue font and add the suffix to the base model #

GENERAL

Series: Parigi
Subseries: Parigi Cipolla
Brand: Cangini & Tucci
Division: Design
Mounting Type: Portable
Mounting Location: Table
Subcategory: Ambient

PHYSICAL

Shape: Sphere
Diameter (mm): 300
Diameter (in): 11 13/16
Height (mm): 530
Height (in): 20 7/8
Light Distribution: Omnidirectional
Weight (kg): 1.65
Weight (lbs): 3.64
Fixture Finish: AMB / GRN / PNK / RUB / SKB / SMK / TOB / TRA
Holder Finish: CHR
Fixture Material: Glass / Metal

ELECTRICAL

Number of Lamps: 1
Lamp Type: LED Retrofit
Bulb Included: Bulb Not Included
Max. Wattage Per Lamp (W): 7
Lamp Base: E26
Input Voltage (V): 120
Upon Request: 277Vac / GU24

LED

OPTICAL

RATINGS AND CERTIFICATIONS

Certified By: Certified for North American Standards
IP rating: IP20

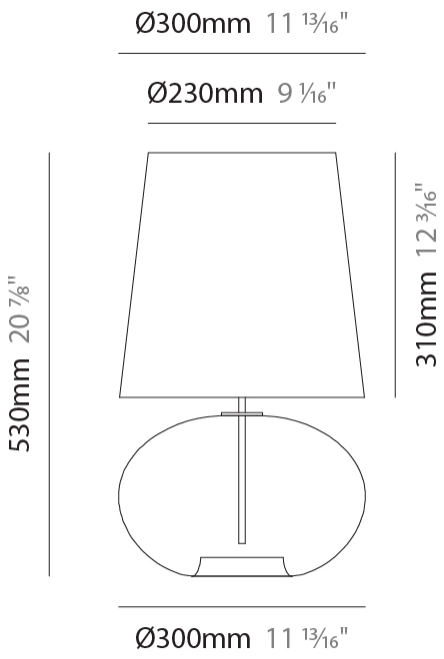

D

Zaneen Group Inc. © 2024, T 1800-388-3382, F 416-247-9319, www.zaneen.com

Available for International specifications by adding 'INT' at the end of the existing Model #. For assistance on 'custom' specifications, contact zteam@zaneen.com.
In a constant effort to supply the best product, we reserve the right to change specifications or materials without notice. The most recent specification sheets are found at zaneen.com

ZANEEN®

PROJECT	
TYPE	
SPECIFIER	
QUANTITY	
DATE	

PARIGI CIPOLLA PORTABLE

D144009-

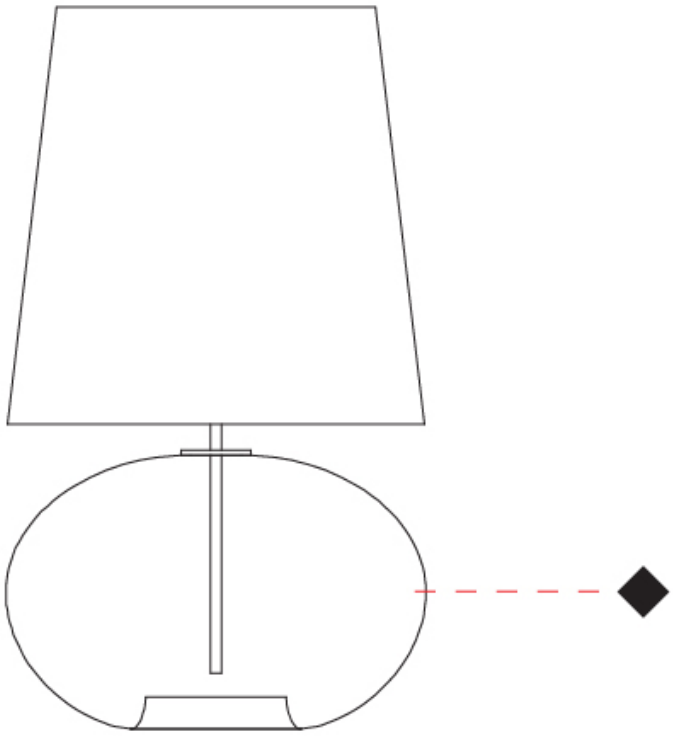

D

Zaneen Group Inc. © 2024, T 1800-388-3382, F 416-247-9319, www.zaneen.com

Available for International specifications by adding 'INT' at the end of the existing Model #. For assistance on 'custom' specifications, contact zteam@zaneen.com.
In a constant effort to supply the best product, we reserve the right to change specifications or materials without notice. The most recent specification sheets are found at zaneen.com

ZANEEN®

PROJECT	
TYPE	
SPECIFIER	
QUANTITY	
DATE	

PARIGI CIPOLLA PORTABLE

D144010-

base number — Finish Options

1.To build a product code in our configurator select the specify button on the base model # product page
2. To build a manual product code on this datasheet choose from the options listed below in blue font and add the suffix to the base model #

GENERAL

Series: Parigi
Subseries: Parigi Cipolla
Brand: Cangini & Tucci
Division: Design
Mounting Type: Portable
Mounting Location: Table
Subcategory: Ambient

PHYSICAL

Shape: Sphere
Diameter (mm): 380
Diameter (in): 14 15/16
Height (mm): 630
Height (in): 24 13/16
Light Distribution: Omnidirectional
Weight (kg): 2.64
Weight (lbs): 5.82
Fixture Finish: AMB / GRN / PNK / RUB / SKB / SMK / TOB / TRA
Holder Finish: CHR
Fixture Material: Glass / Metal

ELECTRICAL

Number of Lamps: 1
Lamp Type: LED Retrofit
Bulb Included: Bulb Not Included
Max. Wattage Per Lamp (W): 7
Lamp Base: E26
Input Voltage (V): 120
Upon Request: 277Vac / GU24

LED

OPTICAL

RATINGS AND CERTIFICATIONS

Certified By: Certified for North American Standards
IP rating: IP20

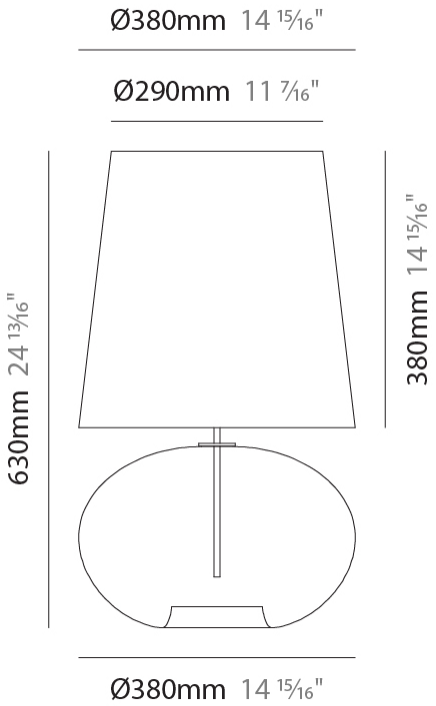

D

Zaneen Group Inc. © 2024, T 1800-388-3382, F 416-247-9319, www.zaneen.com

Available for International specifications by adding 'INT' at the end of the existing Model #. For assistance on 'custom' specifications, contact zteam@zaneen.com.
In a constant effort to supply the best product, we reserve the right to change specifications or materials without notice. The most recent specification sheets are found at zaneen.com

ZANEEN®

PROJECT	
TYPE	
SPECIFIER	
QUANTITY	
DATE	

PARIGI CIPOLLA PORTABLE

D144010-

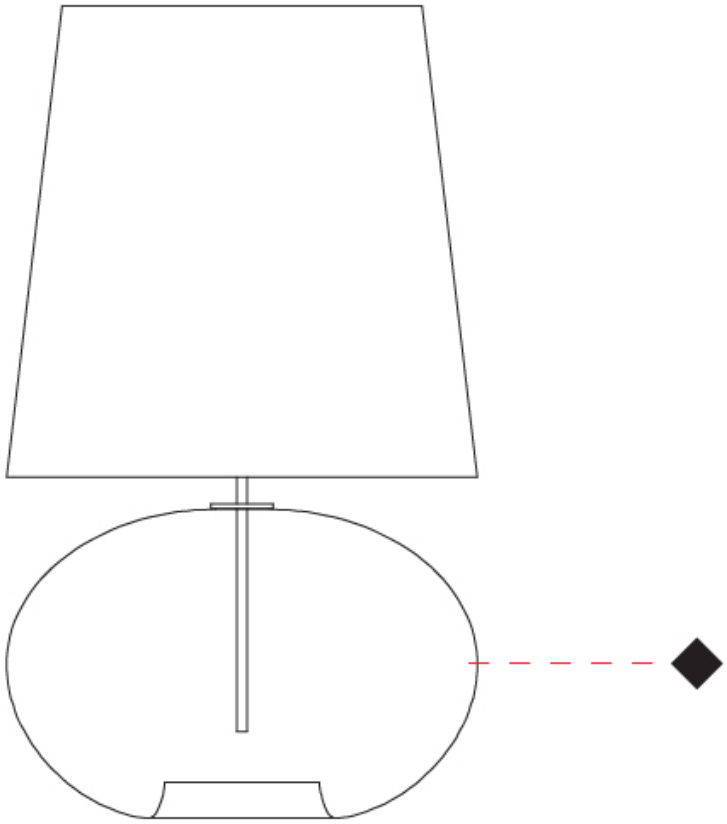

D

Zaneen Group Inc. © 2024, T 1800-388-3382, F 416-247-9319, www.zaneen.com

Available for International specifications by adding 'INT' at the end of the existing Model #. For assistance on 'custom' specifications, contact zteam@zaneen.com.
In a constant effort to supply the best product, we reserve the right to change specifications or materials without notice. The most recent specification sheets are found at zaneen.com

ZANEEN®

PROJECT	
TYPE	
SPECIFIER	
QUANTITY	
DATE	

PARIGI CIPOLLA PORTABLE

D144011-

base number — Finish Options

1.To build a product code in our configurator select the specify button on the base model # product page
2. To build a manual product code on this datasheet choose from the options listed below in blue font and add the suffix to the base model #

GENERAL

Series: Parigi
Subseries: Parigi Cipolla
Brand: Cangini & Tucci
Division: Design
Mounting Type: Portable
Mounting Location: Table
Subcategory: Ambient

PHYSICAL

Shape: Sphere
Diameter (mm): 160
Diameter (in): 6 5/16
Height (mm): 300
Height (in): 11 13/16
Light Distribution: Omnidirectional
Weight (kg): 0.52
Weight (lbs): 1.15
Fixture Finish: AMB / GRN / PNK / RUB / SKB / SMK / TOB / TRA
Holder Finish: CHR
Fixture Material: Glass / Metal

ELECTRICAL

Number of Lamps: 1
Lamp Type: LED Retrofit
Bulb Included: Bulb Not Included
Max. Wattage Per Lamp (W): 4
Lamp Base: E12
Input Voltage (V): 120

LED

OPTICAL

RATINGS AND CERTIFICATIONS

Certified By: Certified for North American Standards
IP rating: IP20

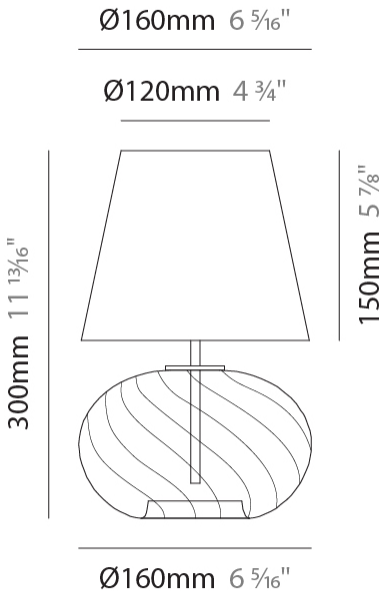

D

Zaneen Group Inc. © 2024, T 1800-388-3382, F 416-247-9319, www.zaneen.com

Available for International specifications by adding 'INT' at the end of the existing Model #. For assistance on 'custom' specifications, contact zteam@zaneen.com.
In a constant effort to supply the best product, we reserve the right to change specifications or materials without notice. The most recent specification sheets are found at zaneen.com

ZANEEN®

PROJECT	
TYPE	
SPECIFIER	
QUANTITY	
DATE	

PARIGI CIPOLLA PORTABLE

D144011-

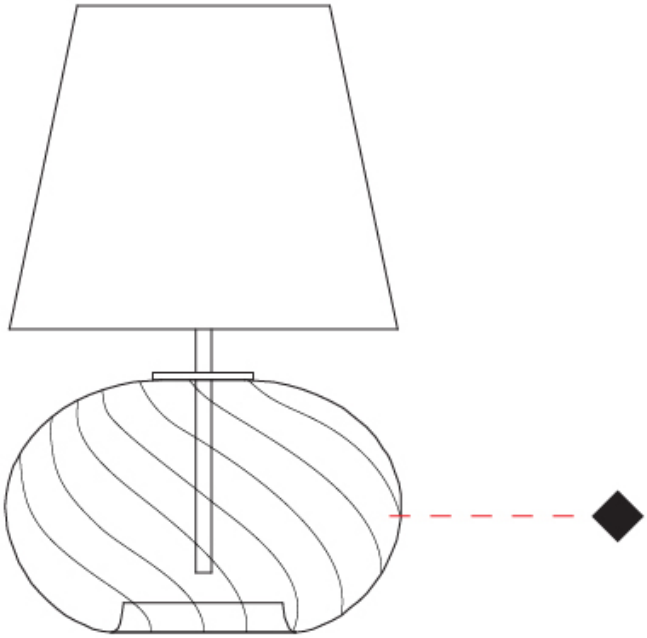

D

Zaneen Group Inc. © 2024, T 1800-388-3382, F 416-247-9319, www.zaneen.com

Available for International specifications by adding 'INT' at the end of the existing Model #. For assistance on 'custom' specifications, contact zteam@zaneen.com.
In a constant effort to supply the best product, we reserve the right to change specifications or materials without notice. The most recent specification sheets are found at zaneen.com

ZANEEN®

PROJECT	
TYPE	
SPECIFIER	
QUANTITY	
DATE	

PARIGI CIPOLLA PORTABLE

D144012-

base number — Finish Options

1.To build a product code in our configurator select the specify button on the base model # product page
2. To build a manual product code on this datasheet choose from the options listed below in blue font and add the suffix to the base model #

GENERAL

Series: Parigi
Subseries: Parigi Cipolla
Brand: Cangini & Tucci
Division: Design
Mounting Type: Portable
Mounting Location: Table
Subcategory: Ambient

PHYSICAL

Shape: Sphere
Diameter (mm): 300
Diameter (in): 11 13/16
Height (mm): 530
Height (in): 20 7/8
Light Distribution: Omnidirectional
Weight (kg): 1.65
Weight (lbs): 3.64
Fixture Finish: AMB / GRN / PNK / RUB / SKB / SMK / TOB / TRA
Holder Finish: CHR
Fixture Material: Glass / Metal

ELECTRICAL

Number of Lamps: 1
Lamp Type: LED Retrofit
Bulb Included: Bulb Not Included
Max. Wattage Per Lamp (W): 7
Lamp Base: E26
Input Voltage (V): 120
Upon Request: 277Vac / GU24

LED

OPTICAL

RATINGS AND CERTIFICATIONS

Certified By: Certified for North American Standards
IP rating: IP20

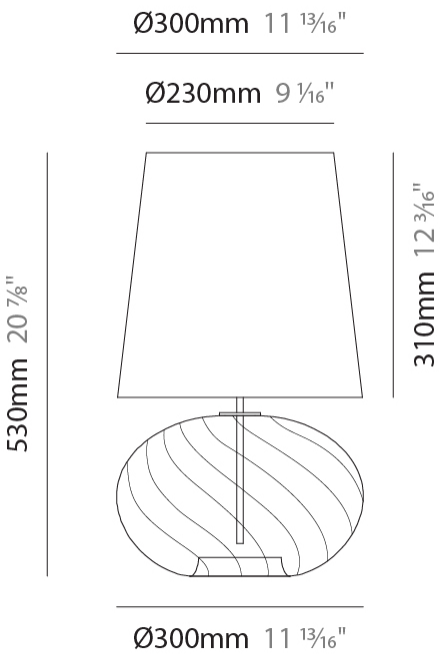

D

Zaneen Group Inc. © 2024, T 1800-388-3382, F 416-247-9319, www.zaneen.com

Available for International specifications by adding 'INT' at the end of the existing Model #. For assistance on 'custom' specifications, contact zteam@zaneen.com.
In a constant effort to supply the best product, we reserve the right to change specifications or materials without notice. The most recent specification sheets are found at zaneen.com

ZANEEN®

PROJECT	
TYPE	
SPECIFIER	
QUANTITY	
DATE	

PARIGI CIPOLLA PORTABLE

D144012-

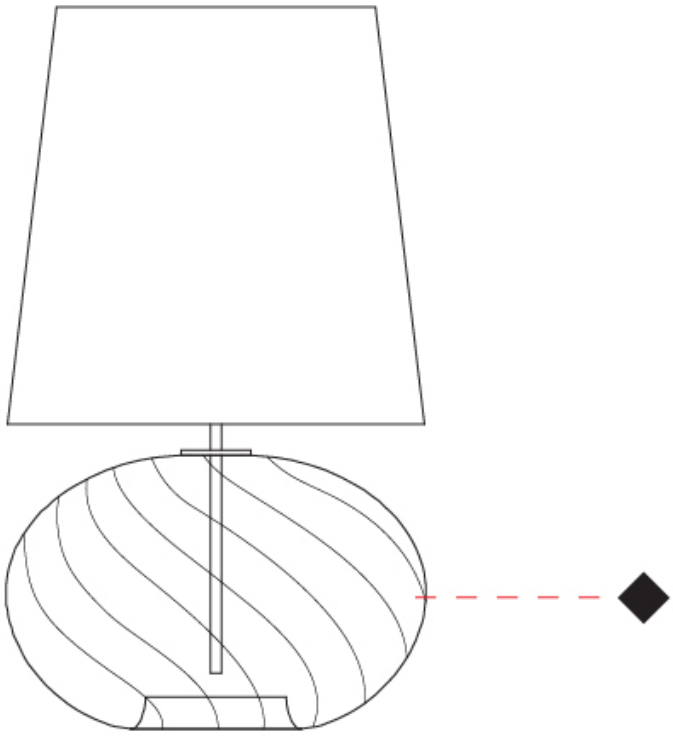

D

Zaneen Group Inc. © 2024, T 1800-388-3382, F 416-247-9319, www.zaneen.com

Available for International specifications by adding 'INT' at the end of the existing Model #. For assistance on 'custom' specifications, contact zteam@zaneen.com.
In a constant effort to supply the best product, we reserve the right to change specifications or materials without notice. The most recent specification sheets are found at zaneen.com

ZANEEN®

PROJECT	
TYPE	
SPECIFIER	
QUANTITY	
DATE	

PARIGI CIPOLLA PORTABLE

D144013-

base number — Finish Options

1.To build a product code in our configurator select the specify button on the base model # product page
2. To build a manual product code on this datasheet choose from the options listed below in blue font and add the suffix to the base model #

GENERAL

Series: Parigi
Subseries: Parigi Cipolla
Brand: Cangini & Tucci
Division: Design
Mounting Type: Portable
Mounting Location: Table
Subcategory: Ambient

PHYSICAL

Shape: Sphere
Diameter (mm): 380
Diameter (in): 14 15/16
Height (mm): 630
Height (in): 24 13/16
Light Distribution: Omnidirectional
Weight (kg): 2.64
Weight (lbs): 5.82
Fixture Finish: AMB / GRN / PNK / RUB / SKB / SMK / TOB / TRA
Holder Finish: CHR
Fixture Material: Glass / Metal

ELECTRICAL

Number of Lamps: 1
Lamp Type: LED Retrofit
Bulb Included: Bulb Not Included
Max. Wattage Per Lamp (W): 7
Lamp Base: E26
Input Voltage (V): 120
Upon Request: 277Vac / GU24

LED

OPTICAL

RATINGS AND CERTIFICATIONS

Certified By: Certified for North American Standards
IP rating: IP20

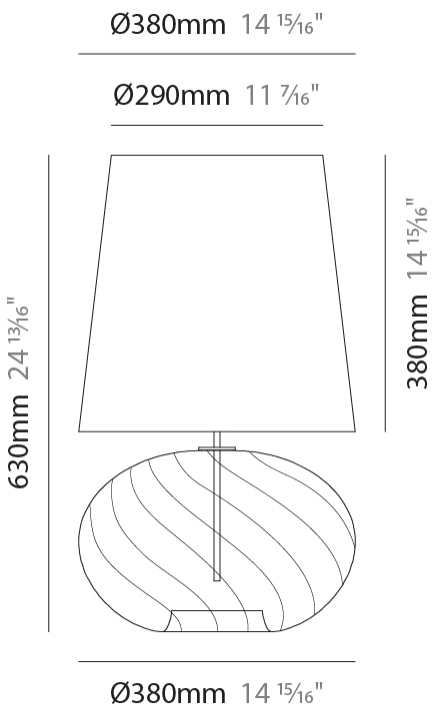

D

Zaneen Group Inc. © 2024, T 1800-388-3382, F 416-247-9319, www.zaneen.com

Available for International specifications by adding 'INT' at the end of the existing Model #. For assistance on 'custom' specifications, contact zteam@zaneen.com.
In a constant effort to supply the best product, we reserve the right to change specifications or materials without notice. The most recent specification sheets are found at zaneen.com

ZANEEN®

PROJECT	
TYPE	
SPECIFIER	
QUANTITY	
DATE	

PARIGI CIPOLLA PORTABLE

D144013-

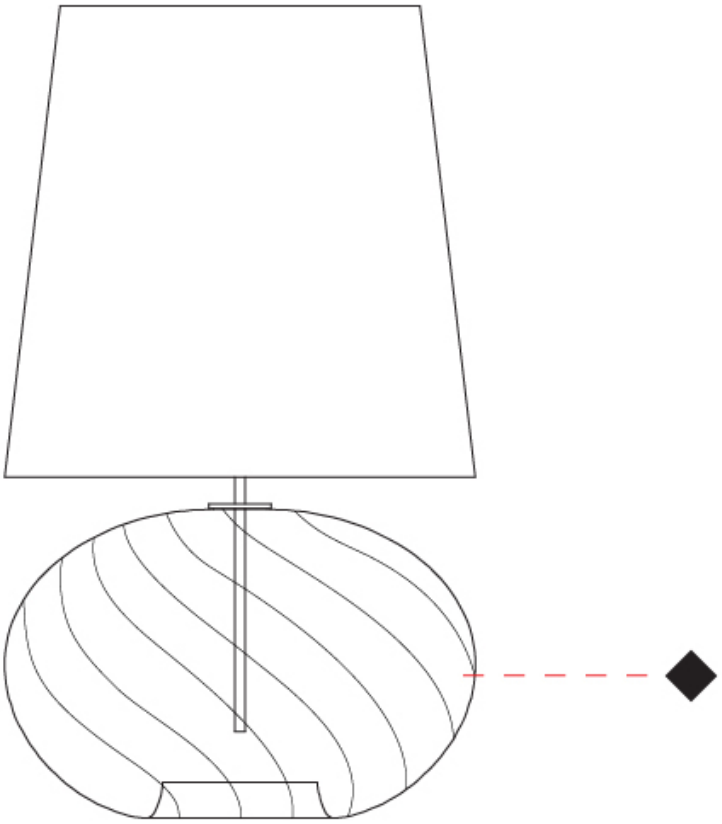

D

Zaneen Group Inc. © 2024, T 1800-388-3382, F 416-247-9319, www.zaneen.com

Available for International specifications by adding 'INT' at the end of the existing Model #. For assistance on 'custom' specifications, contact zteam@zaneen.com.
In a constant effort to supply the best product, we reserve the right to change specifications or materials without notice. The most recent specification sheets are found at zaneen.com

ZANEEN®

PROJECT	
TYPE	
SPECIFIER	
QUANTITY	
DATE	

PARIGI PALLA PORTABLE

D144014-

base number — Finish Options

1.To build a product code in our configurator select the specify button on the base model # product page
2. To build a manual product code on this datasheet choose from the options listed below in blue font and add the suffix to the base model #

GENERAL

Series: Parigi
Subseries: Parigi Palla
Brand: Cangini & Tucci
Division: Design
Mounting Type: Portable
Mounting Location: Table
Subcategory: Ambient

PHYSICAL

Shape: Sphere
Diameter (mm): 160
Diameter (in): 6 5/16
Height (mm): 340
Height (in): 13 3/8
Light Distribution: Omnidirectional
Weight (kg): 0.52
Weight (lbs): 1.15
Fixture Finish: AMB / GRN / PNK / RUB / SKB / SMK / TOB / TRA
Holder Finish: CHR
Fixture Material: Glass / Metal

ELECTRICAL

Number of Lamps: 1
Lamp Type: LED Retrofit
Bulb Included: Bulb Not Included
Max. Wattage Per Lamp (W): 4
Lamp Base: E12
Input Voltage (V): 120

LED

OPTICAL

RATINGS AND CERTIFICATIONS

Certified By: Certified for North American Standards
IP rating: IP20

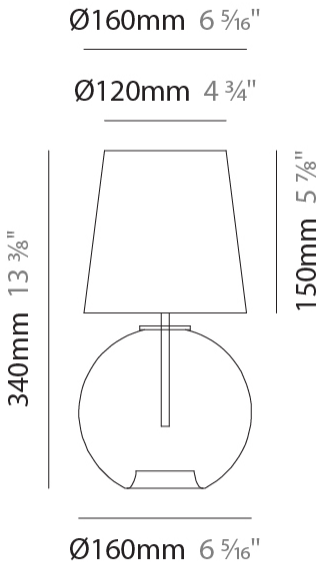

D

Zaneen Group Inc. © 2024, T 1800-388-3382, F 416-247-9319, www.zaneen.com
Available for International specifications by adding 'INT' at the end of the existing Model #. For assistance on 'custom' specifications, contact zteam@zaneen.com.
In a constant effort to supply the best product, we reserve the right to change specifications or materials without notice. The most recent specification sheets are found at zaneen.com

ZANEEN®

PROJECT	
TYPE	
SPECIFIER	
QUANTITY	
DATE	

PARIGI PALLA PORTABLE

D144014-

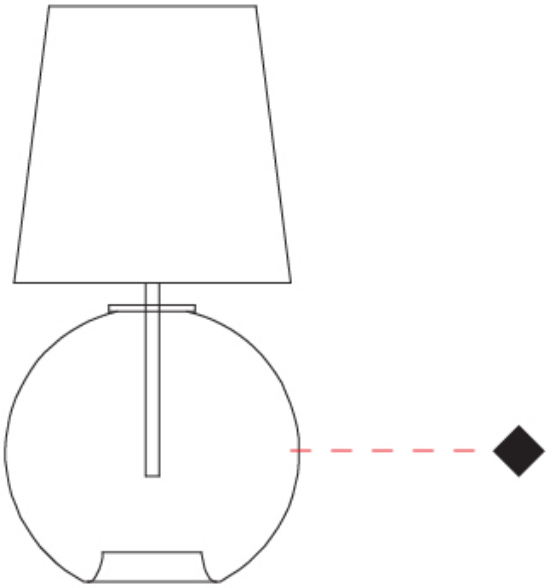

D

Zaneen Group Inc. © 2024, T 1800-388-3382, F 416-247-9319, www.zaneen.com

Available for International specifications by adding 'INT' at the end of the existing Model #. For assistance on 'custom' specifications, contact zteam@zaneen.com.
In a constant effort to supply the best product, we reserve the right to change specifications or materials without notice. The most recent specification sheets are found at zaneen.com

ZANEEN®

PROJECT	
TYPE	
SPECIFIER	
QUANTITY	
DATE	

PARIGI PALLA PORTABLE

D144015-

base number — Finish Options

1.To build a product code in our configurator select the specify button on the base model # product page
2. To build a manual product code on this datasheet choose from the options listed below in blue font and add the suffix to the base model #

GENERAL

Series: Parigi
Subseries: Parigi Palla
Brand: Cangini & Tucci
Division: Design
Mounting Type: Portable
Mounting Location: Table
Subcategory: Ambient

PHYSICAL

Shape: Sphere
Diameter (mm): 280
Diameter (in): 11
Height (mm): 580
Height (in): 22 13/16
Light Distribution: Omnidirectional
Weight (kg): 1.70
Weight (lbs): 3.77
Fixture Finish: AMB / GRN / PNK / RUB / SKB / SMK / TOB / TRA
Holder Finish: CHR
Fixture Material: Glass / Metal

ELECTRICAL

Number of Lamps: 1
Lamp Type: LED Retrofit
Bulb Included: Bulb Not Included
Max. Wattage Per Lamp (W): 7
Lamp Base: E26
Input Voltage (V): 120
Upon Request: 277Vac / GU24

LED

OPTICAL

RATINGS AND CERTIFICATIONS

Certified By: Certified for North American Standards
IP rating: IP20

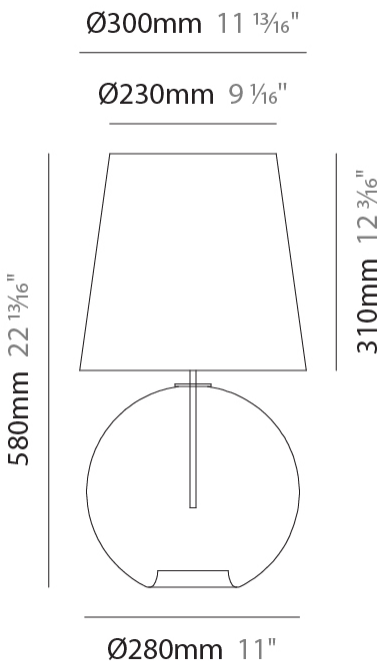

D

Zaneen Group Inc. © 2024, T 1800-388-3382, F 416-247-9319, www.zaneen.com

Available for International specifications by adding 'INT' at the end of the existing Model #. For assistance on 'custom' specifications, contact zteam@zaneen.com.
In a constant effort to supply the best product, we reserve the right to change specifications or materials without notice. The most recent specification sheets are found at zaneen.com

ZANEEN®

PROJECT	
TYPE	
SPECIFIER	
QUANTITY	
DATE	

PARIGI PALLA PORTABLE

D144015-

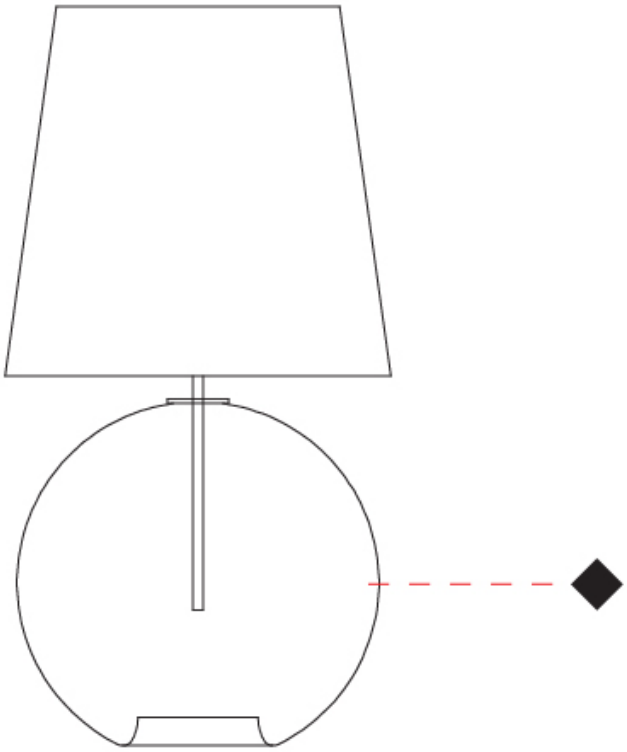

D

Zaneen Group Inc. © 2024, T 1800-388-3382, F 416-247-9319, www.zaneen.com

Available for International specifications by adding 'INT' at the end of the existing Model #. For assistance on 'custom' specifications, contact zteam@zaneen.com.
In a constant effort to supply the best product, we reserve the right to change specifications or materials without notice. The most recent specification sheets are found at zaneen.com

ZANEEN®

PROJECT	
TYPE	
SPECIFIER	
QUANTITY	
DATE	

PARIGI PALLA PORTABLE

D144016-

base number — Finish Options

1.To build a product code in our configurator select the specify button on the base model # product page
2. To build a manual product code on this datasheet choose from the options listed below in blue font and add the suffix to the base model #

GENERAL

Series: Parigi
Subseries: Parigi Palla
Brand: Cangini & Tucci
Division: Design
Mounting Type: Portable
Mounting Location: Table
Subcategory: Ambient

PHYSICAL

Shape: Sphere
Diameter (mm): 380
Diameter (in): 14 15/16
Height (mm): 780
Height (in): 30 11/16
Light Distribution: Omnidirectional
Weight (kg): 2.70
Weight (lbs): 5.95
Fixture Finish: AMB / GRN / PNK / RUB / SKB / SMK / TOB / TRA
Holder Finish: CHR
Fixture Material: Glass / Metal

ELECTRICAL

Number of Lamps: 1
Lamp Type: LED Retrofit
Bulb Included: Bulb Not Included
Max. Wattage Per Lamp (W): 7
Lamp Base: E26
Input Voltage (V): 120
Upon Request: 277Vac / GU24

LED

OPTICAL

RATINGS AND CERTIFICATIONS

Certified By: Certified for North American Standards
IP rating: IP20

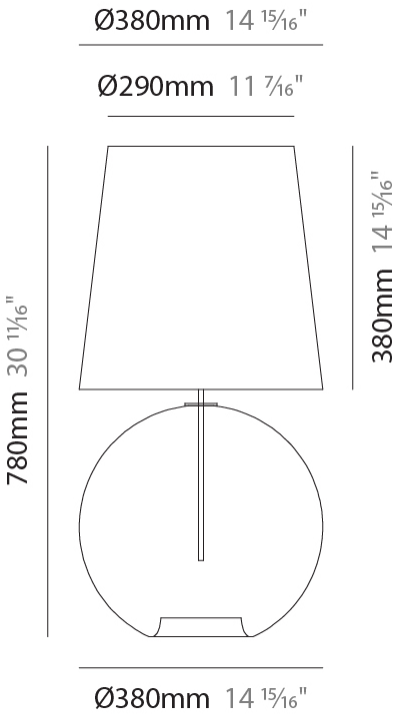

D

Zaneen Group Inc. © 2024, T 1800-388-3382, F 416-247-9319, www.zaneen.com

Available for International specifications by adding 'INT' at the end of the existing Model #. For assistance on 'custom' specifications, contact zteam@zaneen.com.
In a constant effort to supply the best product, we reserve the right to change specifications or materials without notice. The most recent specification sheets are found at zaneen.com

ZANEEN®

PROJECT	
TYPE	
SPECIFIER	
QUANTITY	
DATE	

PARIGI PALLA PORTABLE

D144016-

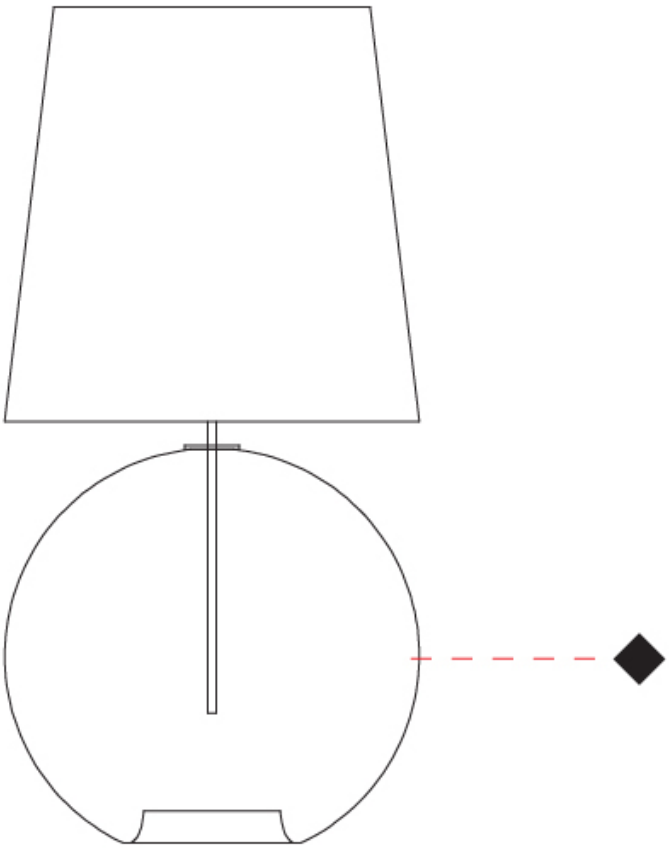

D

Zaneen Group Inc. © 2024, T 1800-388-3382, F 416-247-9319, www.zaneen.com

Available for International specifications by adding 'INT' at the end of the existing Model #. For assistance on 'custom' specifications, contact zteam@zaneen.com.
In a constant effort to supply the best product, we reserve the right to change specifications or materials without notice. The most recent specification sheets are found at zaneen.com

ZANEEN®

PROJECT	
TYPE	
SPECIFIER	
QUANTITY	
DATE	

PARIGI PALLA PORTABLE

D144017-

base number | Finish Options

1.To build a product code in our configurator select the specify button on the base model # product page
2. To build a manual product code on this datasheet choose from the options listed below in blue font and add the suffix to the base model #

GENERAL

Series: Parigi
Subseries: Parigi Palla
Brand: Cangini & Tucci
Division: Design
Mounting Type: Portable
Mounting Location: Table
Subcategory: Ambient

PHYSICAL

Shape: Sphere
Diameter (mm): 160
Diameter (in): 6 5/16
Height (mm): 340
Height (in): 13 3/8
Light Distribution: Omnidirectional
Weight (kg): 0.52
Weight (lbs): 1.15
Fixture Finish: AMB / GRN / PNK / RUB / SKB / SMK / TOB / TRA
Holder Finish: CHR
Fixture Material: Glass / Metal

ELECTRICAL

Number of Lamps: 1
Lamp Type: LED Retrofit
Bulb Included: Bulb Not Included
Max. Wattage Per Lamp (W): 4
Lamp Base: E12
Input Voltage (V): 120

LED

OPTICAL

RATINGS AND CERTIFICATIONS

Certified By: Certified for North American Standards
IP rating: IP20

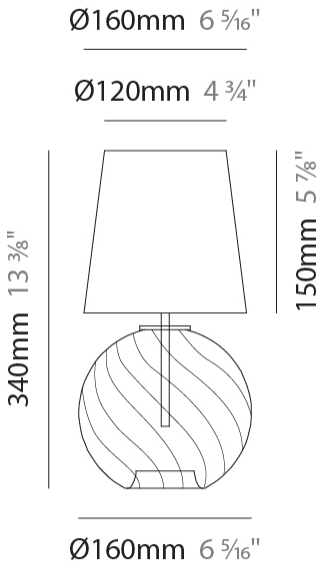

D

Zaneen Group Inc. © 2024, T 1800-388-3382, F 416-247-9319, www.zaneen.com

Available for International specifications by adding 'INT' at the end of the existing Model #. For assistance on 'custom' specifications, contact zteam@zaneen.com.
In a constant effort to supply the best product, we reserve the right to change specifications or materials without notice. The most recent specification sheets are found at zaneen.com

ZANEEN®

PROJECT	
TYPE	
SPECIFIER	
QUANTITY	
DATE	

PARIGI PALLA PORTABLE

D144017-

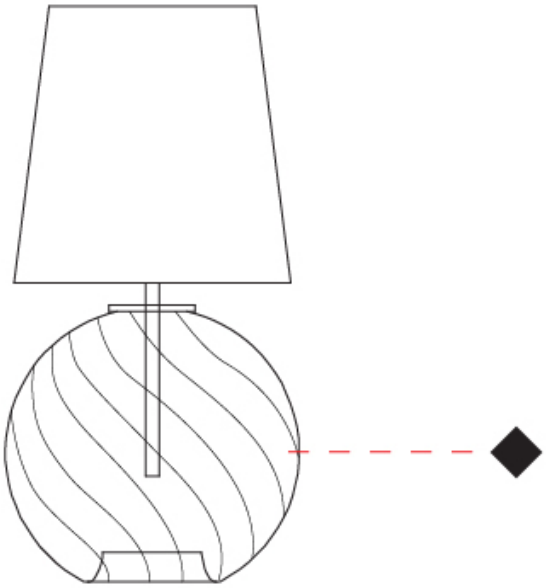

D

Zaneen Group Inc. © 2024, T 1800-388-3382, F 416-247-9319, www.zaneen.com

Available for International specifications by adding 'INT' at the end of the existing Model #. For assistance on 'custom' specifications, contact zteam@zaneen.com.
In a constant effort to supply the best product, we reserve the right to change specifications or materials without notice. The most recent specification sheets are found at zaneen.com

ZANEEN®

PROJECT	
TYPE	
SPECIFIER	
QUANTITY	
DATE	

PARIGI PALLA PORTABLE

D144018-

base number — Finish Options

1.To build a product code in our configurator select the specify button on the base model # product page
2. To build a manual product code on this datasheet choose from the options listed below in blue font and add the suffix to the base model #

GENERAL

Series: Parigi
Subseries: Parigi Palla
Brand: Cangini & Tucci
Division: Design
Mounting Type: Portable
Mounting Location: Table
Subcategory: Ambient

PHYSICAL

Shape: Sphere
Diameter (mm): 280
Diameter (in): 11
Height (mm): 580
Height (in): 22 13/16
Light Distribution: Omnidirectional
Weight (kg): 1.70
Weight (lbs): 3.77
Fixture Finish: AMB / GRN / PNK / RUB / SKB / SMK / TOB / TRA
Holder Finish: CHR
Fixture Material: Glass / Metal

ELECTRICAL

Number of Lamps: 1
Lamp Type: LED Retrofit
Bulb Included: Bulb Not Included
Max. Wattage Per Lamp (W): 7
Lamp Base: E26
Input Voltage (V): 120
Upon Request: 277Vac / GU24

LED

OPTICAL

RATINGS AND CERTIFICATIONS

Certified By: Certified for North American Standards
IP rating: IP20

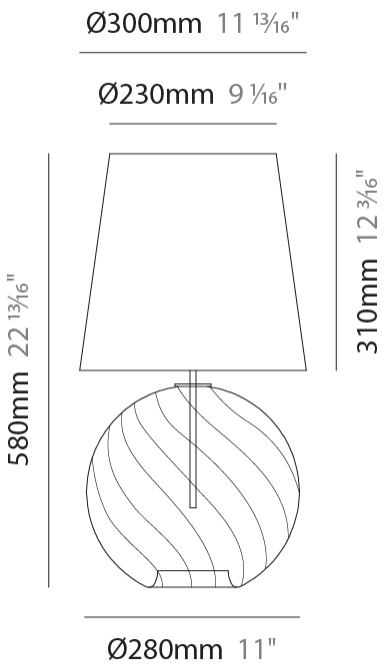

D

Zaneen Group Inc. © 2024, T 1800-388-3382, F 416-247-9319, www.zaneen.com

Available for International specifications by adding 'INT' at the end of the existing Model #. For assistance on 'custom' specifications, contact zteam@zaneen.com.
In a constant effort to supply the best product, we reserve the right to change specifications or materials without notice. The most recent specification sheets are found at zaneen.com

ZANEEN®

PROJECT	
TYPE	
SPECIFIER	
QUANTITY	
DATE	

PARIGI PALLA PORTABLE

D144018-

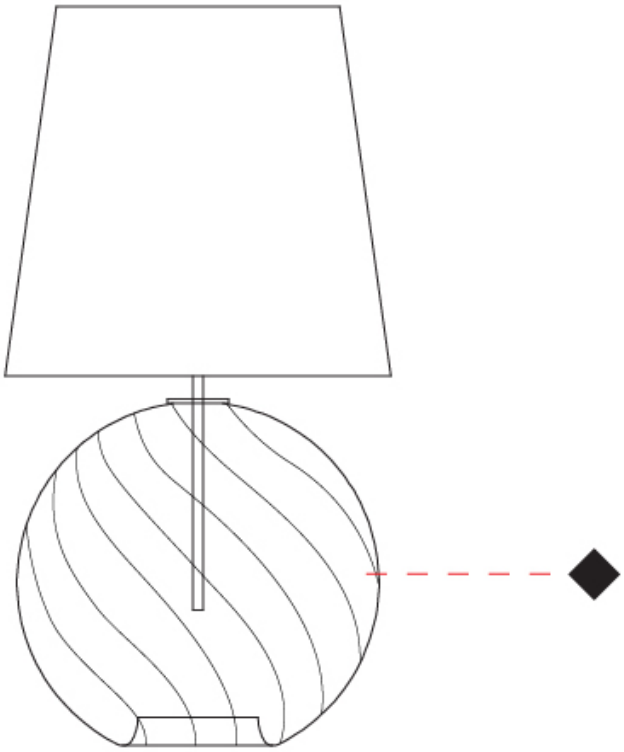

D

Zaneen Group Inc. © 2024, T 1800-388-3382, F 416-247-9319, www.zaneen.com

Available for International specifications by adding 'INT' at the end of the existing Model #. For assistance on 'custom' specifications, contact zteam@zaneen.com.
In a constant effort to supply the best product, we reserve the right to change specifications or materials without notice. The most recent specification sheets are found at zaneen.com

ZANEEN®

PROJECT	
TYPE	
SPECIFIER	
QUANTITY	
DATE	

PARIGI PALLA PORTABLE

D144019-

base number — Finish Options

1.To build a product code in our configurator select the specify button on the base model # product page
2. To build a manual product code on this datasheet choose from the options listed below in blue font and add the suffix to the base model #

GENERAL

Series: Parigi
Subseries: Parigi Palla
Brand: Cangini & Tucci
Division: Design
Mounting Type: Portable
Mounting Location: Table
Subcategory: Ambient

PHYSICAL

Shape: Sphere
Diameter (mm): 380
Diameter (in): 14 15/16
Height (mm): 780
Height (in): 30 11/16
Light Distribution: Omnidirectional
Weight (kg): 2.70
Weight (lbs): 5.95
Fixture Finish: AMB / GRN / PNK / RUB / SKB / SMK / TOB / TRA
Holder Finish: CHR
Fixture Material: Glass / Metal

ELECTRICAL

Number of Lamps: 1
Lamp Type: LED Retrofit
Bulb Included: Bulb Not Included
Max. Wattage Per Lamp (W): 7
Lamp Base: E26
Input Voltage (V): 120
Upon Request: 277Vac / GU24

LED

OPTICAL

RATINGS AND CERTIFICATIONS

Certified By: Certified for North American Standards
IP rating: IP20

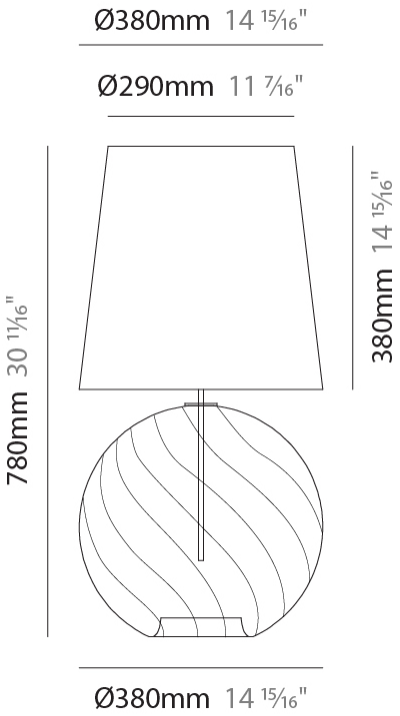

D

Zaneen Group Inc. © 2024, T 1800-388-3382, F 416-247-9319, www.zaneen.com

Available for International specifications by adding 'INT' at the end of the existing Model #. For assistance on 'custom' specifications, contact zteam@zaneen.com.
In a constant effort to supply the best product, we reserve the right to change specifications or materials without notice. The most recent specification sheets are found at zaneen.com

ZANEEN®

PROJECT	
TYPE	
SPECIFIER	
QUANTITY	
DATE	

PARIGI PALLA PORTABLE

D144019-

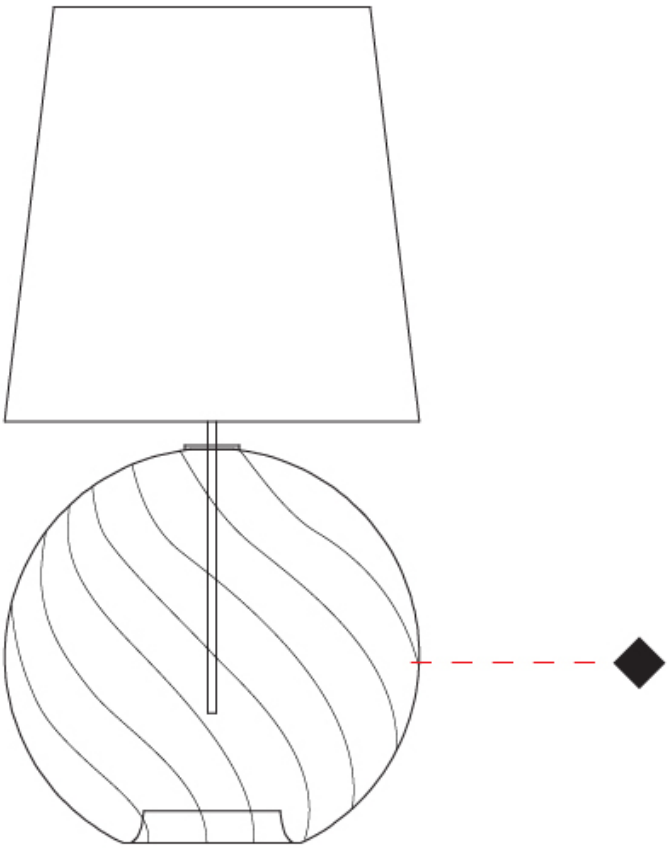

D

Zaneen Group Inc. © 2024, T 1800-388-3382, F 416-247-9319, www.zaneen.com

Available for International specifications by adding 'INT' at the end of the existing Model #. For assistance on 'custom' specifications, contact zteam@zaneen.com.
In a constant effort to supply the best product, we reserve the right to change specifications or materials without notice. The most recent specification sheets are found at zaneen.com

ZANEEN®

PARIGI

COLOR FINISH CHART

PROJECT	
TYPE	
SPECIFIER	
QUANTITY	
DATE	

Fixture Finish

Amber - AMB

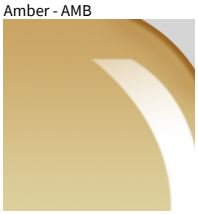

Green - GRN

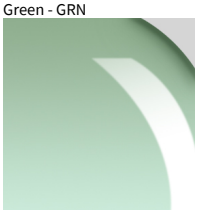

Pink - PNK

Ruby - RUB

Sky Blue - SKB

Smoke - SMK

Tobacco - TOB

Transparent - TRA

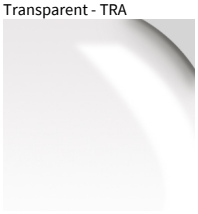

Holder Finish

Chrome - CHR

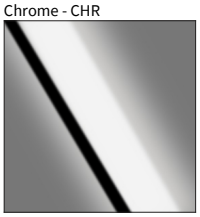

Polished Stainless Steel - PSS

Digital: Not all screens are calibrated the same, and therefore, colors will appear differently between screens.
Physical: When texture is involved, there will be variations in color, character and tone within a product series and between product families.

D

Zaneen Group Inc. © 2024, T 1800-388-3382, F 416-247-9319, www.zaneen.com

Available for International specifications by adding 'INT' at the end of the existing Model #. For assistance on 'custom' specifications, contact zteam@zaneen.com.
In a constant effort to supply the best product, we reserve the right to change specifications or materials without notice. The most recent specification sheets are found at zaneen.com

ZANEEN®

PARIGI

PROJECT	
TYPE	
SPECIFIER	
QUANTITY	
DATE	

LEGEND

	floor-mounted		pivotable		special LED (upon request) RGB, RGBW, tunable, gold+, meat+, art+, fashion+
	wall and ceiling: recessed and surface mounted		rotating		warm dim / natural dimming LED
	ceiling-mounted and wall-mounted		illuminate tilted		rechargeable battery powered
	wall-mounted		color of suspension cable		fixture with natural vivid LED (upon request)
	omni-directional light distribution		length of suspension cable	CRI	color rendering index
	direct light distribution		reflector degree selection	°K	color temperature
	direct/indirect light distribution		super spot	LM	lumen (luminous flux)
	indirect light distribution		lens	LM/W	efficacy (lumens per watt)
	asymmetric light distribution		lens pack	UGR	Unified Glare Rating (UGR) range from 5-40
	aura light distribution		shine ring	316	marine grade (AISI 316 stainless steel)
	round wall or ceiling cut-out		integrated shine ring with diffuser		walk on
	square wall or ceiling cut-out		free individual colors 01-29		drive on
	the supplied jig specifies the cutout dimensions		individual colors: 00 (free of charge), 01-25 (extra charge)	DSC	Dark Sky Compliance
	minimum distance (meters) lamp - object		luminaire part to be colored (F1)		Americans with Disabilities Act (less than 4" off the wall located between 27"-84" from floor)
	recessed depth		luminaire part to be colored (F2)		lamp protected against explosion
	ceiling thickness in mm		luminaire part to be colored (F3)		blown glass using traditional methods by master glass blower
	ceiling thickness selection		luminaire part to be colored (F4)		acoustic material
	dimmable DP (phase), DV (0-10V), DD (dali), DS (step-dim)		luminaire part to be colored (F5)		protection class I, protection insulation
	included or excluded LED driver/transformer/ control gear		color of 3-circuit adaptor		protection class II, protection insulation
	separately switchable		indirect diffuser		ETL Certified to UL and CSA Standards
	sensor	D	direct diffuser		UL Certified to UL and CSA Standards
	remote control		ball-proof (upon request)		CSA Certified to UL and CSA Standards
	available upon request		accessory		Certified for North American Standards

IP RATING

IP20	protected against ingress of solid bodies greater than 12.5mm (finger)
IP33	protected against ingress of solid bodies greater than 2.5mm protected against sprays of water up to 60 degrees from the vertical (rain)
IP40	protected against ingress of solid bodies greater than 1mm (wire) no protection against the ingress of moisture
IP43	protected against ingress of solid bodies greater than 1mm (wire) protected against sprays of water up to 60 degrees from the vertical (rain)
IP44	protected against ingress of solid bodies greater than 1mm (wire) protected against water splashed from all directions
IP54	protected against limited ingress of dust (wet rooms/covered outdoor areas) protected against water splashed from all directions
IP65	protected against ingress of dust protected against jets of water
IP66	protected against ingress of dust protected against powerful jets of water or heavy seas
IP67	protected against ingress of dust protected against immersion of water between 15cm - 1m for 30 minutes
IP68	protected against ingress of dust protected against immersion of water under pressure for long periods

IK RATING

IK01	protected against 0.14 joules impact (equivalent to 0.25kg mass dropped from 56mm above the surface)
IK02	protected against 0.2 joules impact (equivalent to 0.25kg mass dropped from 80mm above the surface)
IK03	protected against 0.35 joules impact (equivalent to 0.25kg mass dropped from 140mm above the surface)
IK04	protected against 0.5 joules impact (equivalent to 0.25kg mass dropped from 200mm above the surface)
IK05	protected against 0.7 joules impact (equivalent to 0.25kg mass dropped from 280mm above the surface)
IK06	protected against 1 joules impact (equivalent to 0.25kg mass dropped from 400mm above the surface)
IK07	protected against 2 joules impact (equivalent to 0.5kg mass dropped from 400mm above the surface)
IK08	protected against 5 joules impact (equivalent to 1.7kg mass dropped from 300mm above the surface)
IK09	protected against 10 joules impact (equivalent to 5.0kg mass dropped from 200mm above the surface)
IK10	protected against 20 joules impact (equivalent to 5.0kg mass dropped from 400mm above the surface)